Valuetronics International, Inc.
1-800-552-8258
MASTER COPY

MODEL 2724A
PROGRAMMABLE RESISTANCE STANDARD

OPERATION MANUAL

VALHALLA SCIENTIFIC

9955 MESA RIM ROAD
SAN DIEGO, CA 92121
(619) 457-5576
(619) 457-0127 Fax

TABLE OF CONTENTS

SECTION I: UNPACKING AND INSTALLATION

1-1 Introduction
1-2 Inspection
1-3 Line Voltage/Fuse Selection
1-4 Bench Use
1-5 Rack Mounting
1-6 Safety Precautions

SECTION II: SPECIFICATIONS

2-1 General
2-2 2724A Active Slow-Mode Specifications
2-3 2724A Active Fast-Mode Specifications
2-4 2724A CPR Mode Specifications (Slow or Fast)
2-5 Miscellaneous Specifications
2-6 Environmental and Physical Specifications

SECTION III: OPTIONAL EQUIPMENT

3-1 Standard Accessories
3-2 Available Options

SECTION IV: FRONT PANEL CONTROLS

4-1 General
4-2 POWER Section
4-3 STEP CONTROL Section
4-4 Display Window
4-5 IEEE-488 Indicator
4-6 LOW CURRENT Indicator
4-7 Standard Keypad
4-8 Special Function Keys
4-9 OUTPUT Terminals

SECTION V: REAR PANEL CONTROLS

5-1 General
5-2 REAR OUTPUT Terminals
5-3 Calibration Keyswitch
5-4 IEEE-488 CONNECTOR
5-5 Fuseholder
5-6 Line Voltage Selector
5-7 AC Line Receptacle

SECTION VI: MANUAL OPERATION

6-1 General
6-2 Power-Up
6-3 Making Connections
6-4 Selecting the Resistance Value
6-5 Fast Mode or Slow Mode?
6-6 Cardinal Point Operation (CPR)
6-7 Error Messages

Figure 6-1. Error Sources in Resistance Measurements
Figure 6-2. 2724A Equivalent Circuit
Figure 6-3. 2724A CPR Mode Equivalent Circuit

SECTION VII: REMOTE OPERATION

7-1 General
7-2 The Purpose of IEEE Standard 488
7-3 Definitions
7-4 Bus Restrictions
7-5 Detailed Descriptions of Bus Operation
7-6 Universal Commands
7-7 REMOTE and LOCAL States
7-8 Setting the IEEE Address
7-9 IEEE Commands for the 2724A (Device Dependent)
7-10 SRQ's and Serial Polls
7-11 Parallel Polls
7-12 Configuration Status Word

Table 7-1. ASCII Characters

SECTION VIII: ROUTINE MAINTENANCE

8-1 General
8-2 Periodic Maintenance
8-3 Calibration Notes
8-4 Standard 2724A Calibration Procedure
8-5 2724A CPR Calibration Procedure
8-6 Calibration Via the GPIB

Figure 8-1. Calibration Equipment Connections

SECTION IX: THEORY OF OPERATION

9-1 Troubleshooting
9-2 Functional Descriptions
9-3 Detailed Circuit Descriptions

Figure 9-1. "Active Ohms" Block Diagram

SECTION X: SPECIAL PROCEDURES

10-1 General
10-2 Non-DC Test Currents
10-3 Using the 2724A with a Wheatstone Bridge
10-4 Using the 2724A with High Resistance Meters
10-5 Using the 2724A with Active-Feedback Current Sources
10-6 Line Noise Pick-Up
10-7 Thermal Voltage Offset Errors

Figure 10-1. Wheatstone Bridge Errors

SECTION XI: MANUAL CHANGES AND ADDENDUMS

SECTION XII: PARTS LISTS

SECTION XIII: DRAWINGS AND SCHEMATICS

CERTIFICATION

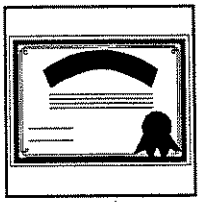

Valhalla Scientific, Inc. certifies that this instrument was thoroughly tested and inspected and found to meet published specifications when shipped from the factory. Valhalla Scientific, Inc. further certifies that its calibration measurements are traceable to the National Institute of Standards and Technology to the extent allowed by NIST's calibration facility.

WARRANTY

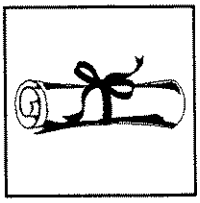

The warranty period for this instrument is stated on your invoice and packing list. Please refer to these to determine appropriate warranty dates. We will repair or replace the instrument during the warranty period provided it is returned to Valhalla Scientific, Inc. freight prepaid. No other warranty is expressed or implied. We are not liable for consequential damages. Permission and a return authorization number must be obtained directly from the factory for warranty repairs. No liability will be accepted if returned without such permission. Due to continuing product refinement and due to possible parts manufacturer changes, Valhalla Scientific reserves the right to change any or all specifications without notice.

SECTION I UNPACKING & INSTALLATION

1-1. Introduction

The Valhalla Scientific Model 2724A is a precision resistance standard suitable for a variety of military and commercial needs. Some features of this versatile instrument include:

1) Fully-adjustable resistance ranges from 0 ohms to 11 Gigohms.
2) "Fast Mode" function allows the user to apply pulsed or low frequency waveforms.
3) Optional programmability via the GPIB (IEEE-488) bus.
4) Optional Cardinal Point Reference (CPR) function utilizes the internal reference resistors to simulate a precision "decade resistance" standard.
5) Reliable 2ppm (24-hour) stability.

These and other functions are detailed in the operating instructions of this manual, Sections 4, 5 and 6.

1-2. Inspection

If the shipping carton is damaged, request that the carrier's agent be present when the unit is unpacked. If the instrument appears damaged, the carrier's agent should authorize repairs before the unit is returned to the factory. Even if the instrument appears undamaged, it may have suffered internal damage in transit that may not be evident until the unit is operated or tested to verify conformance with its specifications. If the unit fails to operate, notify the carrier's agent and the nearest Valhalla Sales Office. Retain the shipping carton for the carrier's inspection. **DO NOT return equipment to Valhalla Scientific or any of its sales offices prior to obtaining authorization to do so.**

1-3. Line Voltage/Fuse Selection

The only adjustments required prior to operation of the 2724A are to set the rear panel selector switch to the local AC line voltage and to verify that the correct fuse for this voltage is fitted. The supply voltages and their corresponding fuses are listed below:

105 to 125 VAC, 50-400Hz = 750mA Slo-Blo

210 to 250 VAC, 50-400Hz = 500mA Slo-Blo

Ensure that the correct line voltage selection is made prior to applying power to the 2724A!

1-4. Bench Use

The 2724A is delivered ready for bench-top operation and special instructions for use in this manner other than the procedures of Section 4, 5 and 6 are not required.

1-5. Rack Mounting

Optional rack ears are available to facilitate mounting of the 2724A in a standard 19" equipment rack. These are listed in Section 3 of this manual. If the 2724A is to be transported while mounted in a rack then it must be supported so as to prevent upward and downward movement.

The 2724A is sensitive to thermal gradients in the surrounding environment, thus the user must ensure that at least 1.75" of free air space is allowed around the 2724A when installed in a rack. The user should also ensure that the units below and above the 2724A do not

exhaust warm air onto the case of the 2724A. If a unit placed beneath the 2724A has an unusually hot exterior top surface and it is not possible to alter its location, it is recommended that an aluminum "reflector" plate be used between this unit and the 2724A.

Under no circumstances should the ambient air temperature surrounding the 2724A be allowed to exceed 50°C while in operation or 70°C while in storage.

1-6. Safety Precautions

The power connector is a three-contact device and should be mated only with a three-contact connector where the third contact provides a continuous ground connection. A mating power cord has been provided. If the power is provided through an extension cable, the ground connection must be continuous throughout this cable. **Failure to provide a continuous ground connection to the 2724A may render it unsafe for use!**

SECTION II SPECIFICATIONS

2-1. General

The accuracy specifications below are valid for the indicated period of time from the date of calibration. Accuracies are valid at the calibration temperature ±5°C for calibration temperatures within the range of 15°C to 30°C, following a 1 hour warm-up. Add 21 ppm for Valhalla's traceability uncertainty to the National Institute of Standards and Technology (NIST). The specifications apply to connections using the full 4-wire configuration only. For 2-wire operation, add ±40μV.

2-2. 2724A Active Slow-Mode Specifications

Resistance Range (Ω)	Accuracies (ppm of setting)			Stability (DC to 1Hz)	
	90 Days	180 Days	360 Days	24 Hour	1 Year
0 to 120 [1]	±7ppm ±2mΩ	±9ppm ±3mΩ	±11ppm ±4mΩ	±2ppm	±10ppm
.12K to 1.2K	±7ppm ±7mΩ	±9ppm ±9mΩ	±11ppm ±11mΩ	±2ppm	±10ppm
1.2K to 12K	±7ppm ±50mΩ	±9ppm ±63mΩ	±11ppm ±75mΩ	±2ppm	±10ppm
12K to 120K	±7ppm ±500mΩ	±9ppm ±630mΩ	±11ppm ±750mΩ	±2ppm	±10ppm
120K to 1.2M	±12ppm ±5Ω	±15ppm ±7Ω	±18ppm ±9Ω	±2ppm	±10ppm
1.2M to 12M	±20ppm ±50Ω	±25ppm ±63Ω	±30ppm ±75Ω	±2ppm	±10ppm
12M to 120M	±40ppm ±1KΩ	±50ppm ±1.5KΩ	±60ppm ±2KΩ	±500Ω	±50ppm
.12G to 1.2G	±0.1% ±50KΩ	±0.15% ±63KΩ	±0.2% ±75KΩ	±50KΩ	±50ppm
1.2G to 11G	±0.1% ±5MΩ	±0.15% ±6.3MΩ	±0.2% ±7.5MΩ	±5MΩ	±0.05%

[1] Specified up to 30mA. Above 30mA add ±0.15ppm per milliwatt to the accuracy specification.

Resistance	Test Current		Temperature	Settling Times	
Range (Ω)	Min	Max	Coefficient	Change in Test I	Change in Ω
0 to 120	500μA	120mA*	1.5ppm/°C	2 seconds	2 seconds
.12K to 1.2K	50μA	12mA	1.5ppm/°C	2 seconds	2 seconds
1.2K to 12K	5μA	1.2mA	1.5ppm/°C	2 seconds	2 seconds
12K to 120K	500nA	120μA	1.5ppm/°C	2 seconds	2 seconds
120K to 1.2M	50nA	12μA	3ppm/°C	2 seconds	2 seconds
1.2M to 12M	5nA	1.2μA	5ppm/°C	3 seconds	2 seconds
12M to 120M	500pA	120nA	15ppm/°C	4 seconds	2 seconds
.12G to 1.2G	50pA	12nA	15ppm/°C	6 seconds	3 seconds
1.2G to 11G	5pA	1.2nA	15ppm°C	15 seconds	5 seconds

* This is 12mA maximum if Option CPR is installed.

2-3. 2724A Active Fast-Mode Specifications

Resistance Range (Ω)	Accuracy	Settling Times		Maximum Test Current (I)	Temp Coef (Ω per °C)	Freq Resp [2]
		Change in Test I	Change in Value			
0 to 120 [1]	±0.04Ω	0.1ms	5ms	120mA	0.006	3kHz
.12K to 1.2K	±0.4Ω	0.1ms	5ms	12mA	0.06	3kHz
1.2K to 12K	±4Ω	0.1ms	5ms	1.2mA	0.6	3kHz
12K to 120K	±40Ω	0.2ms	5ms	120μA	6	2kHz
120K to 1.2M	±400Ω	1ms	5ms	12μA	60	500Hz
1.2M to 12M	±6KΩ	10ms	10ms	1.2μA	600	50Hz
12M to 120M	±60KΩ	500ms	100ms	120nA	6KΩ	[3]
.12G to 1.2G	±600KΩ	5 seconds	2 seconds	12nA	60KΩ	[3]
1.2G to 12G	±6MΩ	15 seconds	5 seconds	1.2nA	600KΩ	[3]

[1] Specified at 30mA. Above that add ±0.15ppm per milliwatt to the accuracy specification.
[2] Maximum frequency of test current. Additional error of up to 0.05% at maximum frequency.
[3] These ranges unspecified for AC.

2-4. 2724A CPR Mode Specifications (Slow or Fast Mode)

Cardinal Point Resistance	Accuracies (Deviation from displayed value)			Stability (DC to 1Hz)	
	90 Days	180 Days	360 Days	24 Hour	1 Year
100Ω nom.	±7ppm ±2mΩ	±9ppm ±3mΩ	±11ppm ±4mΩ	±2ppm	±10ppm
1KΩ nom.	±7ppm ±7mΩ	±9ppm ±9mΩ	±11ppm ±11mΩ	±2ppm	±10ppm
10KΩ nom.	±7ppm ±50mΩ	±9ppm ±63mΩ	±11ppm ±75mΩ	±2ppm	±10ppm
100KΩ nom.	±7ppm ±500mΩ	±9ppm ±630mΩ	±11ppm ±750mΩ	±2ppm	±10ppm
1MΩ nom.	±12ppm ±5Ω	±15ppm ±7Ω	±18ppm ±9Ω	±2ppm	±10ppm
10MΩ nom.	±20ppm ±50Ω	±25ppm ±63Ω	±30ppm ±75Ω	±2ppm	±15ppm

CPR	Max Test I	Temp Coef
100Ω	12mA	1.5ppm/°C
1KΩ	12mA	1.5ppm/°C
10KΩ	1.2mA	1.5ppm/°C
100KΩ	120μA	1.5ppm/°C
1MΩ	12μA	3ppm/°C
10MΩ	1.2μA	5ppm/°C

Settling Times:	Fast Mode	Slow Mode
	0.1ms	100ms
	0.1ms	100ms
	0.1ms	100ms
	0.1ms	100ms
	0.3ms	1 sec
	3ms	5 sec

2-5. Miscellaneous Specifications

Output Configuration:
Selectable 2-wire or 4-wire low thermal EMF terminals; front and rear provided in parallel

Leakage Current:
±2pA ±0.2pA/°C

Maximum Noise and Thermals (4-wire mode):

	DC to 10Hz	10Hz to 10kHz
Standard Mode:	±4μV	±40μV
Fast Mode:	±30μV	±300μV
CPR Mode:	±2μV	±20μV

✓ Also refer to Section 10-7.

2-6. Environmental and Physical Specifications

Dimensions:
89 mm (3.5") H x 432mm (17") W x 432mm (17") D

Weights:
7.2 kg (16 lb) net, 10.5kg (23 lb) shipping

Power Requirements:
115 or 230 VAC ±10% @ 50 to 400 Hz; 50VA maximum

Temperature:
Operating: 0°C to 50°C
Storage: -30°C to 70°C

Humidity:
up to 70% RH at 40°C (non-condensing)

SECTION III OPTIONAL EQUIPMENT

3-1. Standard Accessories

The Model 2724A is shipped from the factory with a detachable power cord and an operation manual. Some accessories which may be desirable for certain applications are listed below.

3-2. Available Options

Listed below are the options available for use with the Model 2724A Programmable Resistance Standard.

Option RX-3: Rack Ears

Option "RX-3" is a set of rack ears that permit mounting of the Model 2724A in a standard 19" equipment rack.

Option TL-1: IEEE Interface

Option "TL-1" is an IEEE-488 GPIB Talk-Listen interface that allows control via the IEEE-488 Bus for remote range programming and calibration. Refer to Section 7 for more details.

Options GP-1, GP-2: GPIB Cable

1 or 2 meter IEEE-488 GPIB interface cable for use with Option TL-1.

Option BBL: Banana-to-Banana Cable

This option is a 48" long shielded cable terminated at both ends with high performance 3/4" spaced dual banana plugs. Use of this option is recommended for signal levels where inaccuracies of 1μV or more can be tolerated.

Option SL-48: Low-Thermal Cable

This option is a 48" low-thermal shielded cable terminated at each end in high quality gold-plated copper spade lugs. Use of this cable is recommended whenever the best performance is required, and for calibration.

Option M24: Maintenance Kit

This option facilitates calibration by providing a switch box that eliminates the need for continuous disconnection and reconnection of cables. Also included is a clear plexiglas calibration cover with holes that allow adjustment of the internal potentiometers without lifting the cover.

Option CPR: Cardinal Point Reference

In addition to its normal operating modes, Option "CPR" allows the 2724A to be used as a precision decade resistance standard by utilizing the internal precision resistor set. Benefits when using CPR mode are reduced noise and thermals, better response when using pulsed waveforms, and decreased settling times. A disadvantage is that the maximum test current of the unit is reduced to 12mA. Six of these "cardinal points" are provided, one each for 100Ω, 1kΩ, 10kΩ, 100kΩ, 1MΩ, and 10MΩ.

Also included as part of this option is a "PPM deviation" calculator. Please refer to Section 6-6 for more details.

SECTION IV FRONT PANEL CONTROLS

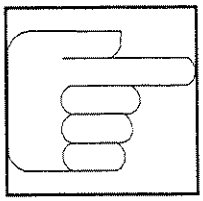

4-1. General

This section outlines the use of each of the front panel controls and connectors. The user is advised to read Section 6 to obtain full descriptions of the methods of operation of the 2724A in the various modes available.

4-2. POWER Section

This push-on, push-off switch controls application of power to the instrument. Power is applied when the green dot is showing.

4-3. STEP CONTROL Section

This section contains five keys which are described below:

ON **OFF** Enables (ON) or disables (OFF) the "step" function.

← Moves the cursor one place to the left (more significant bit).

→ Moves the cursor one place to the right (less significant bit).

↑ Increments the bit on which the cursor is placed.

↓ Decrements the bit on which the cursor is placed.

4-4. Display Window

This multi-function alpha-numeric vacuum fluorescent display (VFD) provides a means of communication between the user and the 2724A. It normally displays the selected value of resistance but may also provide the user with other messages which are explained in Section 6-7.

4-5. IEEE-488 Indicator

This red LED illuminates when the 2724A is under remote control via the optional GPIB interface.

4-6. LOW CURRENT Indicator

This red LED illuminates if the applied test current is below the minimum for the selected value of resistance.

4-7. Standard Keypad

The keypad consists of 24 keys that provide the user with direct entry capability, access to memory features, and mode selection. The functions of these keys are explained below and in Section 6.

0-9 These keys, including the decimal point, are used for direct entry of a resistance value and for changing the IEEE address.

CLR This key is used to clear the display, to change the IEEE address, or to erase entry errors.

IEEE ADDR This key is used to display or change the IEEE address. See Section 7-8.

MΩ This key selects megohms when using the direct entry method of selecting the resistance value.

KΩ This key selects kilo-ohms when using the direct entry method of selecting the resistance value.

Ω This key selects ohms when using the direct entry method of selecting the resistance value.

STO MEM This key allows the user to program up to 9 resistance values in non-volatile memory for easy recall.

RCL MEM This key is used to recall a stored resistance value.

RCL LAST This key automatically returns the 2724A to the previously selected resistance value.

MAN This key may be used to return the 2724A to manual control when being operated via the optional GPIB interface.

2 WIRE This key selects a 2-wire terminal configuration. See Note, Section 4-8-2.

FAST MODE This key selects that the 2724A operate in the "fast mode". See CPR note, Section 4-8-2.

4-8. Special Function Keys

There are two keys which may differ depending upon whether or not the 2724A has been fitted with Option CPR. These are described below.

4-8-1. Standard Model 2724A

These keys are present on instruments that have <u>not</u> been fitted with Option CPR:

4 WIRE This key selects a 4-wire terminal configuration. This is the default mode of operation.

SLOW MODE This selects the "slow mode". This is the default mode of operation.

4-8-2. Model 2724A with Option CPR

The keys described below are present only on instruments that have been fitted with Option CPR.

NOTE: The **2-WIRE** and **FAST MODE** keys of this instrument become push-on, push-off types.

CARD PNT This key selects the cardinal point that is closest to, but not less than, the selected resistance.

PPM DEV This key is used to instruct the 2724A to calculate the amount of deviation from the cardinal point (in parts-per-million) for a value entered by the user. Refer to Section 6-6-2.

4-9. OUTPUT Terminals

This terminal cluster is used to make voltage and current connections to the 2724A. Two terminals are provided for voltage sensing (**V**) and two for the test current (**I**).

These terminals are wired in parallel with the corresponding terminals on the rear panel. See Section 6-3 for the various connection methods.

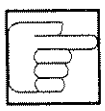

SECTION V REAR PANEL CONTROLS

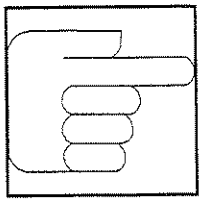

5-1. General

The functions of the rear panel controls and connectors are described in the following paragraphs.

5-2. REAR OUTPUT Terminals

These terminals are identical in function to the corresponding front terminals, and are wired in parallel with them. See Section 6-3 for the various connection methods.

CAUTION!

The 2724A provides rear panel connectors wired in parallel with those on the front panel. Under no circumstances should connections to both the front and rear terminals exist simultaneously.

5-3. Calibration Keyswitch

This key operated switch is used to enable the calibration sequence. Refer to Section 8 for details.

5-4. IEEE-488 CONNECTOR

This connector, if installed, is used to connect to the GPIB (IEEE-488) bus. Refer to Section 7.

5-5. Fuseholder

This device contains the main line fuse. Fuse values are listed on the rear panel and in Section 1-3 for the different AC line voltages available. **Replace blown fuses with their exact equivalent *only*!**

5-6. Line Voltage Selector

The 2724A may be operated from either 115VAC or 230VAC. Make the appropriate selection for the local AC line voltage using this slide-switch. Make sure to install the corresponding fuse when switching voltages.

5-7. AC Line Receptacle

This 3-prong receptacle mates with the power cord provided with the instrument. **Use only the mating cord provided or its exact equivalent!**

SECTION VI MANUAL OPERATION

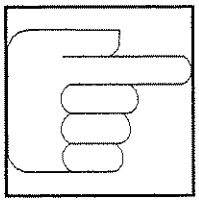

6-1. General

This section, when used in conjunction with Sections 4 and 5, provides complete operating instructions for the Model 2724A. If your instrument has been fitted with Option TL-1, refer to Section 7 for the additional instructions that apply to operation of the 2724A via the IEEE-488 interface bus.

6-2. Power-Up

The 2724A incorporates an automatic self-test routine that checks the status of various parameters and functions. This self-test is performed immediately after application of power. The normal sequence of events is given below:

1) **HI-THERE** - The 2724A greets the user with one of four possible messages. Other possible greetings are HELLO, BON JOUR, or GUTEN TAG. The 2724A also takes this time to complete the remainder of its initial checks.

2) **2724A V-FB** - This is the software version. If Option CPR has been installed, the display will indicate 2724CPR V-FB.

3) **CAL DATA OK** - The integrity of the calibration constants contained in non-volatile memory have been checked and found to be satisfactory.

4) **IEEE ADDRESS ##** - If the 2724A has been fitted with the optional GPIB interface, the address is indicated here.

5) **0.0000 OHMS** - The default initial resistance value is zero ohms. This value may be changed so that the 2724A always powers up with the programmed value. See Section 6-4-4 for instructions for changing this value.

6-3. Making Connections

The 2724A simulates a resistive load and may be used in either a 2-wire or 4-wire configuration. The greatest accuracy and stability are obtained by connecting the 2724A using the 4-wire method. Refer to the specifications of Section 2. Both methods are described below.

6-3-1. 4-Wire Connections

Figure 6-1 shows the error sources commonly encountered when making resistance measurements and how the 4-wire connection method eliminates these errors. A 4-wire ohmmeter uses two terminals to provide a constant current which passes through the load, and two additional terminals to provide high-impedance voltage measurement.

Connect the *source* or *current* output of the ohmmeter to the "**I**" terminals of the 2724A. Connect the *sense* or *voltage* input of the ohmmeter to the "**V**" terminals of the 2724A. In this configuration, the 2724A should be placed in the 4-wire mode.

NOTE: If the 2724A is equipped with Option CPR, the LED next to the "**2-WIRE**" key should be extinguished, indicating 4-wire operation.

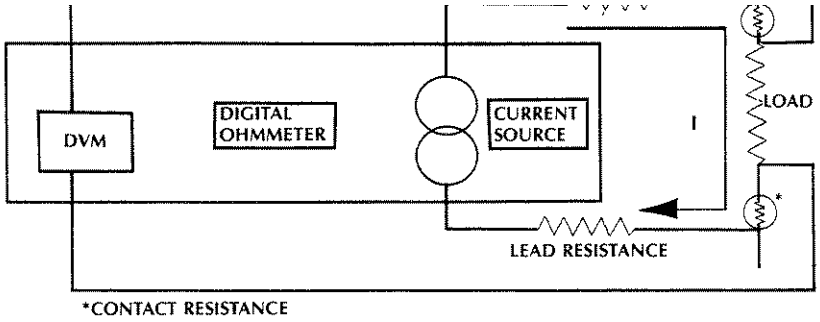

Figure 6-1. Error Sources in Resistance Measurements

6-3-2. 2-Wire Connections

For connections using the 2-wire configuration, connect the ohmmeter across the "**I**" terminals of the 2724A. To minimize measurement errors the leads should be as short as possible, and of a heavy gauge wire. This becomes especially noticeable if the resistance value selected is 100Ω or less. In the 2-wire mode, the "**2-WIRE**" key should be pressed and the corresponding LED illuminated.

6-4. Selecting the Resistance Value

The value of the resistance may be selected in one of four ways. Each of these methods is detailed below.

6-4-1. Direct Entry

If the exact value of the desired resistance is known, it may be entered using the numeric keypad. Use the appropriate key for **Ω**, **KΩ**, or **MΩ**. For example, to select:

1.5000 kilo-ohms, key in **1 . 5 0 0 0 KΩ**

75.8000 megohms, key in **7 5 . 8 MΩ**

Should an error be made during entry and before the "**Ω**", "**KΩ**" or "**MΩ**" keys are pressed, press the **CLR** key to return the display to zero. Resistance values may be entered in any form. For example, 900Ω, 0.9KΩ, or 0.0009 MΩ are all valid entries for 900 ohms.

6-4-2. Step Controls

The step controls may be used to make adjustments to a value already indicated on the display. The step controls are enabled by pressing the "**ON OFF**" key on the front panel. A red LED illuminates and the cursor flashes the least significant digit of the displayed value.

The functions of the arrow keys were described in Section 4. When the adjustment is completed, the step controls should be turned back off. The direct entry method will abort the step controls, and vice-versa.

6-4-3. Remote Programming

The 2724A may be controlled remotely via an optional GPIB interface. The procedures that apply to remote operation are detailed in Section 7.

6-4-4. Programmable Memories

The Model 2724A has two types of user controllable memories:

1) Last Number Recall - The 2724A automatically stores the previously entered value which may be instantly recalled (when not in the step control mode) by pressing the "**RCL LAST**" key.

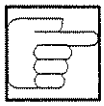

2) User Definable Memory Locations - The 2724A provides 10 memory locations for storage of frequently used resistance values. Any value presently indicated on the display may be stored by pressing the "**STO MEM**" key and the desired numeric key, **0 - 9**. Values may be recalled by pressing the "**RCL MEM**" key, followed by the desired memory location, **0 - 9**.

NOTE: Any value placed in memory location "0" becomes the power-up default value. The 2724A will automatically select this value following application of AC power.

6-5. Fast Mode or Slow Mode?

The 2724A offers two modes of operation that allow it to be used with nearly all types of ohmmeters. These modes are discussed below.

6-5-1. Slow Mode

The "slow mode" offers the greatest accuracy and stability, but is incompatible with ohmmeters that use pulsed or AC currents. The applied current must be a stable, DC level only.

The slow mode is the default mode of operation. If the 2724A is not in the slow mode, press the "**SLOW MODE**" key to return to this setting. The corresponding LED will illuminate. (For 2724A's equipped with Option CPR, press the "**FAST MODE**" key a second time to return to the slow mode.)

As with all components, the 2724A is not a purely resistive device. The "slow mode" equivalent circuit is shown in Figure 6-2. The values listed below correspond to the variables "R", "C" and "L" shown in the drawing.

R = the selected resistance (in ohms)
C = $50 \cdot (R_{REF} \div R)$ nanofarads
L = R millihenries

$\mathbf{R_{REF}}$ is dependent upon the value of R as shown below:

R	R_{REF}
0Ω to 120Ω	100Ω
.12KΩ to 1.2KΩ	1,000Ω
1.2KΩ to 12KΩ	10,000Ω
12KΩ to 120KΩ	100,000Ω
120KΩ to 1.2MΩ	1,000,000Ω
1.2MΩ and above	10,000,000Ω

6-5-2. Fast Mode

The "fast mode" is usable with nearly all types of ohmmeters, including those that generate pulsed or AC test currents. Another advantage of this mode is quicker settling times. A disadvantage of this mode is reduced overall accuracy. Refer to the specifications of Section 2 for more details.

Fast mode is activated by pressing the "**FAST MODE**" key. The corresponding LED will illuminate. To deactivate, press the "**SLOW MODE**" key. (For 2724A's equipped with Option CPR, press the "**FAST MODE**" key a second time to return to the slow mode.)

As with all components, the 2724A is not a purely resistive device. The "fast mode" equivalent circuit is shown in Figure 6-2. The values listed below correspond to the variables "R", "C" and "L" shown in the drawing.

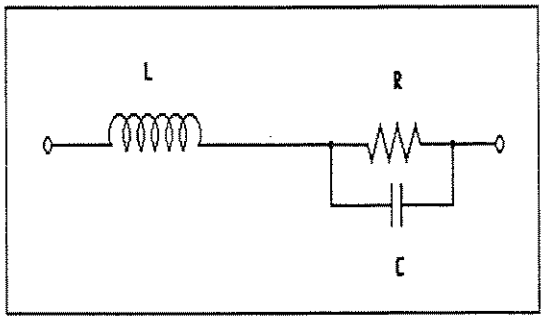

Figure 6-2. 2724A Equivalent Circuit

R = the selected resistance (in ohms)
L = $30 \cdot R_{REF}$ nanohenries
R_{REF} is determined by the value of R as given in Section 6-5-1.

C is determined by the value of R as shown below:

R	C
0Ω to 120Ω	50,000pF
.12KΩ to 1.2KΩ	5,000pF
1.2KΩ to 12KΩ	500pF
12KΩ to 120KΩ	60pF
120KΩ to 1.2MΩ	50pF
1.2MΩ to 12MΩ	50pF
12MΩ to 120MΩ	1000pF
.12GΩ to 1.2GΩ	1000pF
1.2GΩ to 11GΩ	1000pF

NOTE: If the 2724A is being operated in the 2-wire configuration, a 10kΩ resistor appears in series with the capacitor "C".

6-6. Cardinal Point Operation (CPR)

If your 2724A has been fitted with Option CPR, two additional features become available. The *Cardinal Point Reference* (CPR) option provides six decade values of resistance that simulate a typical non-variable resistance standard. The "cardinal points" available are: 100Ω, 1kΩ, 10kΩ, 100kΩ, 1MΩ and 10MΩ. The user should note that the maximum test current allowed for a 2724A fitted with Option CPR is ±12mA.

6-6-1. CPR Mode Activation

The CPR mode is activated through one of three methods. The first and easiest is to press the "**CARD PNT**" key while a value appears in the 2724A display. The LED next to this key will illuminate. The 2724A automatically selects the cardinal point that is closest to, but not less than, the displayed value. The exact calibrated value of the cardinal point appears on the display. This value is <u>not</u> adjustable.

The second method is to directly enter a value while already in the CPR mode. Make sure that the LED next to the CPR key is illuminated. Enter the desired resistance value using the numeric keypad. The 2724A automatically selects the cardinal point that is closest to, but not less than, the entered value.

The third method is via the optional GPIB interface. This method is detailed in Section 7-9-3.

As with all components, the 2724A operating in the CPR mode is not a purely resistive device. Figure 6-3 shows the equivalent circuit.

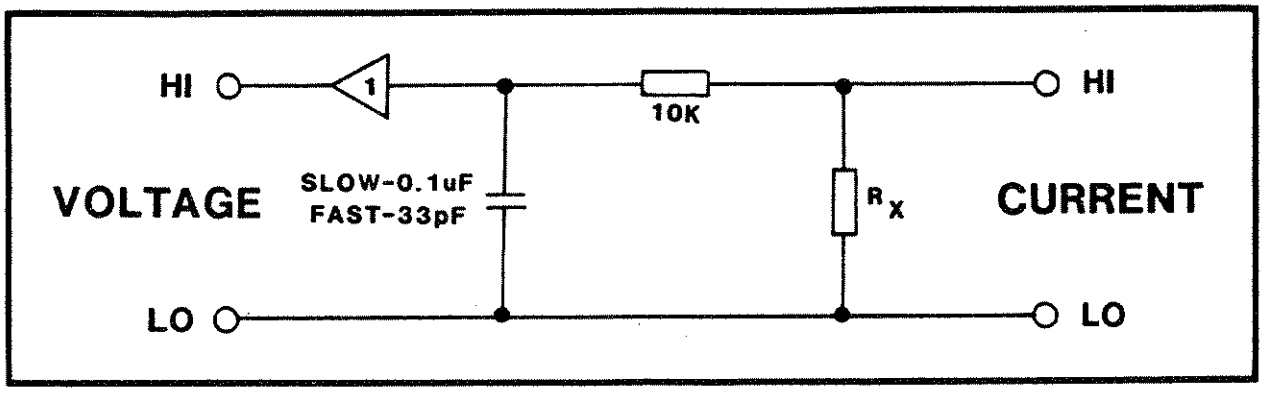

Figure 6-3. 2724A CPR Mode Equivalent Circuit

6-6-2. PPM Deviation Calculator

Another feature included as part of Option CPR is the ability to use the 2724A to calculate deviation from the cardinal point in parts-per-million (PPM). This process is described below.

1) Make sure that the 2724A is in the CPR mode and that the desired cardinal point is displayed.

2) Press the "**PPM DEV**" key. The LED next to the key will illuminate.

3) While the LED is on, enter the value of resistance to be compared to the cardinal point value.

4) The deviation of the entered value from the cardinal point will be displayed for approximately 4 seconds. The value must be re-entered in order to display the deviation again.

NOTE: The maximum deviation that may be displayed is +200000 PPM or -199999 PPM.

6-7. Error Messages

Under certain conditions, the 2724A may display messages to the user. These messages usually indicate that the instrument is unable to comply with the present combination of inputs and/or ranges. The possible messages are defined below.

Flashing "☼". This indicates that the applied test current exceeds the maximum allowed for the resistance selected. If connected to an auto-ranging ohmmeter, this will cause the ohmmeter to increase its range. If using another type of current input, the level must be decreased and/or the resistance value decreased.

"**SETTLING**". This message, though not actually an error message, indicates that the 2724A has not yet achieved a stable output. This message should disappear within a few seconds after application of test current. If it does not, the test current may be too noisy. In this case, select fast mode or CPR mode and try again.

"**A to D Timeout**". This message may flash occasionally and indicates that the settling process has been suspended for some reason. This message should disappear within a few seconds. If it does not, the test current may be too noisy. In this case, select fast mode or CPR mode and try again.

"**OUT OF CAL**". The tolerance of some calibration point has been exceeded. Refer to Section 8.

"**CAL DATA BAD**". The calibration constants in non-volatile memory have been somehow corrupted. Refer to Section 8.

The messages described above generally indicate connection or input errors rather than a failure of the 2724A itself. If any other message is displayed, refer to Section 9 or contact your local Valhalla Scientific representative for advice.

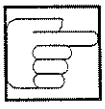

SECTION VII REMOTE OPERATION

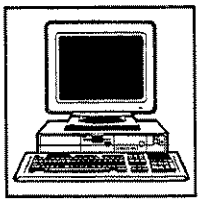

7-1. General

This section of the manual contains instructions for operating the Model 2724A Programmable Resistance Standard via the GPIB (IEEE-488) interface, if installed. It is assumed that the reader is familiar with operation of the 2724A via the front panel controls as described in Section 6.

7-2. The Purpose of IEEE Standard 488

The purpose of the standard is to allow for interconnection of programmable instruments with a minimum of engineering. The intent is to remove the need for adapters and the numerous types of patching cables often encountered with other forms of interfaces. The IEEE-488 standard defines a system configuration for programmable instruments such as calculators, voltmeters and other types of peripheral devices produced by various manufacturers. It provides a set of rules for establishing a defined communications link with a high degree of compatibility yet maintaining flexibility between independently manufactured products.

7-3. Definitions

Listed below are definitions of the terms used to describe the IEEE-488 interface:

Bus: A data link which is usually a set of several parallel wires within a multi-wire cable.

Bi-Directional Bus: A "highway" used for two-way communication, with input and output data being carried on the same lines.

Bit-Parallel: A data transmission method in which all of the bits composing an item of data are present simultaneously on a group of wires in a bus.

Byte: A group of eight data bits which is treated as a single item of data.

Byte-Serial: A data transmission method in which information, in bit-parallel bytes, is transferred sequentially between devices.

Device Dependent Message: A message containing commands or data intended for a specific device.

Handshake: An exchange of signals between two devices which is used to control the transfer of data between them.

Interface: The part of an instrument or system which enables it to be connected to another via a bus.

Interface Message: A message intended for interface management.

Local Operation: Operation of a device by its front panel controls (also referred to as Manual Control).

Remote Operation: Operation of device under the control of another via the bus.

7-4. Bus Restrictions

The IEEE-488 Interfacing Standard (also known as IEC DTC66 (WG3), ANSI MC1-1, GPIB, HP-IB, etc.), defines a bidirectional bus for interconnecting programmable instrumentation in a bit-

parallel, byte-serial fashion. It defines limitations as follows:

1. A maximum of 15 devices may be interconnected by a single bus.

2. The total bus length may not exceed 20 meters, with a maximum interconnection length of 4 meters.

3. Maximum transmission rate is 1 megabyte per second.

4. All bus data is digital.

Of the devices on the bus, only *one* may be the controller which exercises control over all other devices, and is also capable of operating as a talker or listener. The other devices may be listeners (only able to receive data) or talkers (only able to send data), or both. The Model 2724A is capable of talking and listening. The controller may address other devices and command them to listen or talk. Only one device may talk at any one time.

The interconnecting cable consists of sixteen signal wires and eight ground returns linking devices into a complete system:

1. Eight data wires (DIO-0 thru DIO-7)

2. Five management wires (ATN, EOI, SRQ, IFC, and REN)

3. Three "handshake" wires (DAV, NRFD and NDAC)

Each cable connector is a plug/socket combination to permit "daisy-chaining" of units.

It should be noted that these wires use "inverse logic". That is to say that a low level indicates the true (asserted) state and a high level indicates a false (non-asserted) state.

7-5. Detailed Descriptions of Bus Operation

The five management wires are described as follows:

ATN: Asserted by the controller whenever an address or a command is present on the bus.

EOI: May be asserted by the controller or any talker. With ATN true, EOI indicates that the controller is polling devices. With ATN false, EOI is asserted by the talker to indicate the end of data.

SRQ: May be asserted by any device. This indicates that the device requires attention (e.g., a fault has occurred). Normally, the controller will respond by polling to determine which device requires service.

IFC: May be asserted only by the controller. This line initializes the bus to a reset state.

REN: May be asserted only by the controller. This signal places the addressed device into the remote mode.

The three handshake wires are described as follows:

DAV: May be asserted by any talker; indicates that a valid data byte is present on the DIO-0 through DIO-7 data wires.

NRFD: May be asserted by any listener. Indicates that the listener is not ready to receive data.

NDAC: May be asserted by any listener. Indicates that the listener has not yet finished reading the data byte.

The transfer of data on the bus is controlled by these three handshake wires. It is important to note that the drivers for the

handshake wires are all connected for wired-on operation. That is, as long as any of the devices on the bus asserts a handshake line, it will remain true. There must be a complete consensus among the devices for any handshake wire to be high (false).

The talker first waits for all devices to be ready to accept data (checks that NRFD is false) then puts one byte of data on the bus and asserts DAV. It waits for all devices to indicate that the data has been accepted (that is, NDAC to become false) before starting to transfer the next byte of data. This handshake protocol assures that data is transferred at the speed of the slowest device on the bus.

Data is sent in 8-bit bytes on the DIO wires, usually (as in the 2724A) using the ISO-7 standard ASCII characters. Table 7-1 lists each ASCII character and the bus messages applicable to each.

Note that the table is divided into two main groups; the primary command group and the secondary command group. The secondary command group is not utilized in the 2724A.

The primary command group is further divided into four subgroups as follows:

1. **Addressed Command Group** - applied only to addressed devices.
2. **Universal Command Group** - applied to all devices.
3. **Listen Address Group** - set of device listen addresses.
4. **Talk Address Group** - set of device talk addresses.

Data in the above command groups is sent with ATN "true". These type of commands are understood by all devices using the IEEE-488 standard. When data is sent with ATN "false", it is referred to as a *device dependent* command. A device dependant command is specific to a particular device, and may or may not be understood by other devices.

ISO BIT & DIO LINE NUMBER ▶ 7 6 5 4 3 2 1	0 ASCII	0 MSG	1 ASCII	1 MSG	2 ASCII	2 MSG	3 ASCII	3 MSG	4 ASCII	4 MSG	5 ASCII	5 MSG	6 ASCII	6 MSG	7 ASCII	7 MSG	ROW ▼
0 0 0 0	NUL		DLE		SP	00	0	16	@	00	P	16	,		p		0
0 0 0 1	SOH	GTI	DC1	LLO	!	01	1	17	A	01	Q	17	a		q		1
0 0 1 0	STX		DC2		"	02	2	18	B	02	R	18	b		r		2
0 0 1 1	ETX		DC3		#	03	2	19	C	03	S	19	c		s		3
0 1 0 0	EOT	SDC	DC4	DCI	$	04	4	20	D	04	T	20	d		t		4
0 1 0 1	ENQ	PPC[1]	NAK	PPU	%	05	5	21	E	05	U	21	c		u		5
0 1 1 0	ACK		SYN		&	06	6	22	F	06	V	22	f		v		6
0 1 1 1	BEL		ETB		'	07	7	23	G	07	W	23	g		w		7
1 0 0 0	BS	GET	CAN	SPE	(	08	8	24	H	08	X	24	h		x		8
1 0 0 1	HT	TCT	EM	SPD	)	09	9	25	I	09	Y	25	i		y		9
1 0 1 0	LF		SUB		*	10	:	26	J	10	Z	26	j		z		10
1 0 1 1	VT		ESC		+	11	;	27	K	11	[	27	k		{		11
1 1 0 0	FF		FS		,	12	<	28	L	12	\	28	l		|		12
1 1 0 1	CR		GS		-	13	=	29	M	13	]	29	m		}		13
1 1 1 0	SO		RS		.	14	>	30	N	14	^	30	n		~		14
1 1 1 1	SI		US		/	15	?	UNL	O	15	_	UNT	o		DEL		15

COLUMN ▶

ADDRESSED COMMAND GROUP (ACG) | UNIVERSAL COMMAND GROUP (UCG) | LISTEN ADDRESS GROUP (LAG) | TALK ADDRESS GROUP (TAG) | SECONDARY COMMAND GROUP (SCG)

PRIMARY COMMAND GROUP (PCG)

STANDARD ISO 7 CHARACTERS

[1]Requires Secondary Command

Notes:
1 Device Address messages shown in decimal
2 Message codes are

DCI	Device Clear	LLO	Local Lockout	SDC	Selected Device Clear
GET	Device Trigger	PPC	Parallel Poll Configure	SPD	Serial Poll Disable
GTI	Go to Local	PPU	Parallel Poll Unconfigure	SPE	Serial Port Enable

7-6. Universal Commands

This section describes all of the IEEE-488 defined universal commands and their effect upon the operation of the 2724A. The following examples are given in HP Basic and it is assumed that the 2724A has its address set to 15.

NOTE: The example commands below are given in HP Basic. If you are using a language other than HP Basic, consult your programmer's manual for the proper command syntax.

7-6-1. Device Clear (DCL)

This command will cause all of the devices on the bus to enter their reset states (both interface and instrumental functions). The 2724A will perform a soft reset cycle when this is received.

This command can sometimes cause the interface to reset and then re-read the device clear command if the responding instrument is slow to release the handshake. This will be visible as a complete bus lockout with all of the devices continuously performing a device clear. Although every precaution has been taken to eliminate this problem with the IEEE-488 Standard, lockout may sometimes occur. It is recommended the Selective Device Clear Command be used if possible (7-6-2).

An example of this command in HP Basic is **CLEAR 7**.

7-6-2. Selective Device Clear (SDC)

This command will cause only the device at the specified address to perform a reset. This command will perform the same function as the DCL command in 7-6-1 but on individual devices only, thus overcoming the problem inherent with the DCL command.

An example of this command in HP Basic is **CLEAR 715** which causes only the device at address 15 to reset. If your controller does not have a SDC function, the 2724A may also be made to reset upon receipt of the code "A". For example, **OUTPUT 715;"A"**.

NOTE: To ensure that all wires are settled following a device clear or selective device clear command, it is recommended that a 3 second minimum delay is allowed prior to performing any bus operation with the 2724A. Note that the 2724A will not operate the IEEE-488 bus until the complete set of status messages have been displayed following a power-up or reset. Any bus activity with the 2724A during either of the above periods of time may cause undefined results.

7-6-3. Group Execute Trigger (GET)

The execution of this command is dependent on the particular device receiving it, the exact result not being defined by the IEEE-488 (1978) standard. Upon receiving this command the 2724A will handshake the command, but will not respond with any action.

The user should note that only the addressed form of this command is defined by the IEEE-488 (1978) standard however certain manufacturers also include an unaddressed form of this command. The result of receiving this "unofficial" command by the 2724A is not defined and may cause bus errors if used.

Examples of these commands in HP Basic are the statements **TRIGGER 715** for the addressed form, and **TRIGGER 7** for the unaddressed, "unofficial" form.

7-6-4. Go to Local (GTL)

This addressed command will cause the individual addressed device to enter the LOCAL state

(i.e. enables manual operation of the device). This command is fully implemented in the 2724A and is executed in HP Basic by the statement **LOCAL 715**.

The user should note that many computers also have a similar unaddressed version of this command (**LOCAL 7** for HP Basic). This command is actually quite different from the addressed command (it disasserts the REN line) but will cause all of the devices on the bus including the 2724A to enter the LOCAL state.

7-6-5. Interface Clear (IFC)

This command will cause all of the interfaces of the devices on the bus to enter an idle state. This is fully implemented in the 2724A and may be executed in HP Basic by the statement **RESET 7**.

7-6-6. Identify (IDY)

This command is also called "parallel poll". This will cause all devices on the bus to respond by simultaneously placing their parallel poll response byte onto the DIO bus wires. This command is implemented in HP Basic by the statement **PPOLL (7)**.

7-6-7. Local Lock Out (LLO)

This command will cause all of the devices on the bus to enter *REMOTE with Lock Out* state. The function of this command is to disable the manually operated LOCAL key or control of the devices on the bus. This command is implemented in HP Basic by the statement **LOCAL LOCKOUT 7**.

7-6-8. Parallel Poll Configure (PPC), Enable (PPE), Disable (PPD), and Unconfigure (PPU)

These commands are used to set the Parallel Poll response byte and to disable the parallel poll response. These commands are fully implemented in the 2724A and are detailed in Section 7-12.

7-6-9. Remote Enable (REN)

This command (the assertion of the REN wire on the bus) enables all devices on the bus to enter the REMOTE state. This command is applied to all devices on the bus in HP Basic by the statement **REMOTE 7**.

Many computers also have a command that includes the sending of the listen address which will place only the addressed device into the REMOTE state. This is accomplished in HP Basic by the statement **REMOTE 715**, which would place only the device at address 15 into the REMOTE state. Refer to section 7-7.

7-6-10. Serial Poll Enable (SPE) and Disable (SPD)

These commands control the process of performing a serial poll. The serial poll sequence is as follows:

A) The controller commands SPE.
B) The controller addresses a single device as a talker.
C) The addressed device returns its Serial Poll response byte.
D) The controller reads the response byte.
E) The controller may now repeat the sequence from step B or send SPD to end the serial poll.

The 2724A implements this function and may be commanded to send its serial poll response byte in HP Basic by the statement **SPOLL(715)**. This statement will implement the entire sequence once. Refer to Section 7-10 for more details on serial polls and SRQ's.

7-6-11. Take Control (TCT)

This command from the system controller to another potential controller will request that the other take over bus duties. The 2724A does not have the capability of becoming a controller, thus this command is not implemented and will be ignored.

7-7. REMOTE and LOCAL States

A full explanation of the implementation of the LOCAL and REMOTE states is explained here. The 2724A is assumed to have its address set to 15 in all examples.

7-7-1. LOCAL State

When the 2724A is in the LOCAL state the REMOTE indicator on the front panel is extinguished and full manual control of the 2724A as described in Section 6 may be exercised. Note that it is not possible to enter the REMOTE state from the 2724A front panel. The 2724A will accept commands from the IEEE-488 bus while in the LOCAL state but they will be discarded. The unit may however be read at any time without entering the REMOTE state.

The 2724A is placed in the LOCAL state using the HP Basic statement **LOCAL 715** or by pressing the front panel MAN key.

7-7-2. REMOTE State

If the 2724A receives its listen address while the REN line is asserted it will enter the REMOTE state. In this state the REMOTE indicator on the front panel is illuminated and all keys on the front panel are ignored except the MAN key. Pressing the MAN key will return the 2724A to the LOCAL state and reactivate the keys. The 2724A may only be returned to the REMOTE state by the controller.

The 2724A is placed into the REMOTE state the statement **REMOTE 715.**

7-7-3. REMOTE with Lockout

This state is entered *from the REMOTE state* by execution of the HP Basic statement **LOCAL LOCKOUT 7.** While in this state the 2724A will operate as in the REMOTE state, however all keys on the 2724A front panel are ignored, including the MAN key.

7-8. Setting the IEEE Address

The IEEE "address" is the method by which the system controller distinguishes one device on the bus from another. The address of the 2724A is determined by pressing the "**IEEE ADDR**" key on the front panel, and is preset to address 9 at the factory.

This address may be any number from 1 to 30. The process of changing the address is given below (the 2724A must be in the local state).

1) Press the "**IEEE ADDR**" key.
2) Press "**CLR**" to clear the present address.
3) Enter the new address using the numeric keypad.
4) Press the "**Ω**" key to store the new address in non-volatile memory.

The address you choose is entirely dependent on your application and by the type and quantity of devices on your IEEE bus. Some guidelines to follow are:

1) Each device on the bus must have its own unique address. Operating two devices at the same address will produce undefined results and is not recommended.

2) Avoid setting the 2724A to address 0 or to address 31 as this may interfere with the system controller.

7-9. IEEE Commands for the 2724A (Device Dependent)

The Device Dependent command set for the 2724A is described in the following paragraphs. Command examples are given for each in which it is assumed that the 2724A has an address of 15 and that the computer is using HP Basic.

NOTE: The example commands below are given in HP Basic. If you are using a language other than HP Basic, consult your programmer's manual for the proper command syntax.

Commands are not acted upon by the 2724A until an expected terminator is received. The 2724A accepts a carriage return (CR) or EOI asserted with the last character as valid input terminators.

If an undecipherable command is received it will be ignored by the 2724A. In this case the 2724A may be instructed to generate an error message in the form of an SRQ. See Section 7-10.

7-9-1. Setting the Resistance Value

The resistance value may be selected by sending the 2724A a numeric value which represents the value of the resistance in ohms. The 2724A accepts up to 6 significant digits for the input value. Any number of digits that exceeds the quantity 6 will be discarded. The exponent character "E" may be used to signify a power of 10. Some examples are shown below using HP Basic.

OUTPUT 715;"100" = 100.000 ohms

OUTPUT 715;"1200000" = 1.20000M ohms

OUTPUT 715;"9.5E+3" = 9.50000K ohms

7-9-2. Using the Step Controls

The step controls may also be activated via the GPIB. The codes that control these functions are listed below.

DON - Turns step control mode on

DOFF - Turns step control off

U - Same as UP arrow ↑
D - Same as DOWN arrow ↓
L - Same as LEFT arrow ←
R - Same as RIGHT arrow →

The codes may be combined on one line, if desired, in order to form a mini-program as shown below.

OUTPUT 715;"DON,L,L,U,U,R,D,DOFF"

This program causes the third digit from the right to increment twice. The cursor then moves one place to the right and decrements the second from the right digit once. The step controls are then turned back off. This process takes place almost instantaneously and the user will not be able to observe the individual actions.

NOTE: The use of a comma between commands is not required but is recommended in order to clarify the code.

7-9-3. CPR Mode Activation

If your 2724A has been equipped with Option CPR, the code **C1** will activate this mode. This code duplicates the function of the front panel "**CARD PNT**" key. To return to the active mode (power-up condition), send the code **C0**. Examples are shown below using HP Basic.

OUTPUT 715;"C0" = active mode (default)

OUTPUT 715;"C1" = CPR mode

7-9-4. 2-Wire/4-Wire Selection

The input terminal configuration is selected using one of two codes shown below.

T0 - Selects 4-wire (default)
T1 - Selects 2-wire

Examples in HP Basic are:

OUTPUT 715;"T1" = 2-wire configuration

OUTPUT 715;"T0" = 4-wire configuration

7-9-5. Fast-Mode/Slow-Mode Selection

The selection of the fast- or slow-mode of operation is made using the codes below.

M0 - Selects slow-mode (default)

M1 - Selects fast-mode

Examples in HP Basic are:

OUTPUT 715;"M1" = fast-mode

OUTPUT 715;"M0" = slow-mode

7-9-6. Output Delimiter

When the output buffer of the 2724A is read as described in Section 7-10, the end of the transmission is signified by an "output delimiter". This delimiter is normally a ⌐R└F (carriage return, line feed). The 2724A provides a function for changing this delimiter to meet the needs of the computer you are using. These codes are shown below.

E0 - ⌐R└F (default)

E1 - ⌐R└F w/EOI asserted

E2 - ⌐R

E3 - ⌐R w/EOI asserted

E4 - EOI asserted with last character

An example of changing the output delimiter using HP Basic is:

OUTPUT 715;"E2" = ⌐R delimiter only

Note that the 2724A reverts back to the setting **E0** following a power-up or reset.

7-10. SRQ's and Serial Polls

The 2724A may assert the SRQ (service request) wire if any of several conditions exist. The conditions for which it may assert SRQ are determined by the setting of the "**Q**" command as detailed below.

Q0 Disables SRQ feature (default)

Q1 Enables the 2724A to assert SRQ for internal errors; i.e., any displayed fault, overcurrent indication, settling, etc.

Q2 Enables the 2724A to assert SRQ if it receives an undecipherable command.

Q3 Enables the 2724A to assert SRQ for the reasons given for Q1 and Q2.

Q4 Enables the 2724A to assert SRQ upon settling on a new value.

Q5 Enables the 2724A to assert SRQ for the reasons given for Q1 and Q4.

Q6 Enables the 2724A to assert SRQ for the reasons given in Q2 and Q4.

Q7 Enables the 2724A to assert SRQ for all reasons given above.

NOTE: This parameter defaults back to Q0 following a reset or power-up.

7-10-1. Serial Poll Response Byte

When the system controller conducts a serial poll, the 2724A responds with a byte of data informing the controller of the reason for the SRQ. If the 2724A did not generate the SRQ, a zero byte is used as the response. The bit pattern used by the 2724A for the various faults are listed below.

REASON	BIT PATTERN IN RESPONSE
Clock Fault	0100 0001
Math Overflow	0100 0010
Calibration Data Bad	0100 0011
Memory Data Bad	0100 0100
Settling	0101 0010
Settling complete	0101 0000
Out of Cal	0101 0001
Cannot Control	0101 0100
Overcurrent	0101 0101
Error in Input Data	0101 0110

Note: The most significant bit is set if the 2724A is in the REMOTE state.

The program below gives an example of using SRQ's and serial polls in HP Basic.

```
10 OUTPUT 715;"Q7"
20 A=SPOLL(715)
30 PRINT A
40 END
```

The results of the serial poll are contained in "A". If the 2724A did not generate the SRQ, the response is 0. If it did generate the SRQ, the response will be one of the codes listed above.

7-11. Parallel Polls

The 2724A may have its parallel poll response bit set by means of the "P" command. The user must send "Pn" to the unit in order to configure the response, where "n" defines the DIO line that is to be asserted by the 2724A. Sending "P0" (the default setting) selects that no response shall be made to a parallel poll.

7-12. Configuration Status Word

The 2724A may respond to an inquiry from the controller with a "configuration status word" which contains information regarding its present status. This status word may be read any number of times by the controller and the 2724A is not required to be in the REMOTE state.

The status word is returned in the format:

Standard 2724A:

rrrrrr_xOHMS__$Q_nE_nP_nM_nT_n$fcou

2724A with CPR:

rrrrrr_xOHMS__$Q_nE_nP_nM_nT_nC_n$fcou

Where:

_ indicates a blank space.

r are the significant digits of the output resistance value as indicated on the display.

x is a space if the r's refer to ohms; a "K" for kilo-ohms; a "M" for megohms; or a "G" for gigohms.

n is a number that corresponds to the variables of certain parameters: Q, E, P, M, T, and C. These parameters were determined by commands discussed in previous sections of this manual.

f is a space if the step controls are off, or an "F" if they are on.

c is a space in the normal operating mode, or a "C" if the calibration key has been turned to "CALIBRATE".

o is a space if the test current is lower than the maximum allowed or an "O" if the maximum has been exceeded.

u is a space if the test current is higher than the minimum allowed, or a "U" if the level is lower than the minimum.

Using HP Basic, the configuration status word may be read by execution of the following commands:

```
10 DIM A$[100]
20 ENTER 715;A$
30 PRINT A$
40 END
```

The configuration status word will be contained in A$. The variable A$ may be redimensioned to exclude the parameter settings, if desired.

SECTION VIII ROUTINE MAINTENANCE

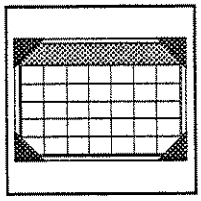

8-1. General

This section contains routine maintenance procedures designed to provide maximum utility from the Model 2724A. Included are cleaning instructions and a calibration procedure. It is assumed throughout this section that the calibration technician is familiar with operation of the 2724A as described in Section 6. If desired, the Model 2724A may also be returned to the factory for maintenance and calibration traceable to NIST.

8-2. Periodic Maintenance

As a recommendation, the Model 2724A should be operated in a dust-free, clean environment. However if the unit is exposed to contaminants, periodic cleaning will be required.

Loose dirt or dust on the exterior surfaces may be removed with a dry soft cloth or brush. Any remaining residue may be removed with a soft cloth dampened in a mild soap and water solution. **Do not use abrasive cleaners!**

The front panel may be cleaned with a soft cloth and a glass cleaner such as Windex or its equivalent. **Do not use petroleum based cleaners on the front panel!**

If required, the interior may be cleaned by blowing with dry compressed air.

If the unit becomes heavily contaminated with dirt or other residue, a complete overhaul is recommended. Contact your local Valhalla Scientific representative or the factory for details.

8-3. Calibration Notes

The calibration procedure should be performed on a regular basis (annually is recommended) to ensure that the Model 2724A remains within the specifications set forth in Section 2. The 2724A should be allowed to warm-up for a minimum of 1 hour with the covers or the calibration cover of the maintenance kit in place prior to beginning the procedure.

8-3-1. Required Test Equipment

Performance of the calibration procedure requires the following items:

1) A constant-current source capable of delivering current levels from 1μA to 10mA at 10 volts compliance and 30mA at 3 volts compliance. Current noise must be less than ±2ppm peak.

2) A digital voltmeter having a resolution of 1μV at a 1VDC input level and a DC accuracy of ±10ppm or greater. (HP3458A or equivalent)

3) A set of precision resistance standards with known values to within ±10ppm. Values required are: 100Ω, 1kΩ, 10kΩ, 100kΩ, 1MΩ and 10MΩ.

4) Cables and switch box as shown in Figure 8-1. The cables should be of the "low-thermal" type for best performance and have a leakage value of $10^{13}\Omega$ or greater. This kit is available as Valhalla Option M24.

5) A calculator is not required but will simplify the procedure if available.

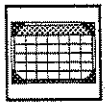

8-3-2. The Theory Behind the 2724A Calibration Procedure

The 2724A is calibrated by comparing its value to a known standard, in this case the set of precision resistors. The comparison is made using a source of stable, known current and through manipulation of Ohm's Law.

The first step requires that the current source be adjusted to a precise value i.e. 1.00000 milliamps. This is done by applying the current to a standard resistor (for this example assume a value of 9999.913Ω) and measuring the voltage drop across it. Ohm's Law ($I = V \div R$) tells us that a known voltage and known resistance allow calculation of a precise current. The current is adjusted until the voltage drop across the resistor equals 9.999913 volts. At this point we have established a known value of current.

In the next step, this precise current is switched over to the 2724A using the switch box. Assume that the 2724A is set for 10.0000 KOHMS. Ohm's Law ($R = V \div I$) also tells us that a known voltage and known current allow calculation of a precise resistance. The 2724A is adjusted until the voltage drop across it equals exactly 10.0000 volts, because 1.00000mA × 10.0000 KOHMs = 10.0000 volts.

At this point the correction factor is entered into the non-volatile memory of the 2724A. The 2724A uses this data to trim its output as necessary in order to maintain the precise specifications stated in Section 2.

All other calibration points are adjusted in a similar manner. Calibration is simplified by the fact that the 2724A prompts the user as to which combination of inputs it requires.

Due to the different steps and adjustments involved, a separate procedure is given for the standard Model 2724A and for instruments equipped with Option CPR. Be sure to determine which procedure applies to your instrument before beginning. (CPR models have a key labeled "**CARD PNT**" in the right-most column of the keypad.)

In addition, each procedure is divided into internal adjustments and external adjustments. **It is important that the instrument be in thermal equilibrium when making the internal adjustments!** This is best accomplished by using the calibration cover which is part of the maintenance kit, Option M24. This cover allows adjustment without lifting the lid. If the lid must be removed for any reason, allow at least 5 minutes for the instrument to restabilize.

8-4. Standard 2724A Calibration Procedure

This procedure applies to instruments that have *not* been fitted with Option CPR. It is recommended that the technician familiarize himself with Section 8-3 of this manual before proceeding.

8-4-1. Internal Adjustments (Standard)

1) With the DVM, monitor the voltage between the V_{LO} and V_{HI} terminals. Remove any connections to the "**I**" terminals and select 100 OHMS. Adjust RV201 for a DVM reading of 0 ±30μV.

✓ The remaining internal adjustments are required only following instrument repair or component change. Periodic adjustment is unnecessary. If these adjustments are not required, skip to 8-4-2.

2) Remove any connections to either the front or rear terminals. With the DVM, monitor the voltage between the rear end of R126 and the rear end of R106. The cover may have to be lifted in order to make these connections. If so, make sure the instrument has time to restabilize before making the adjustment.

3) Select slow mode, 4-wire, and 0 OHMS. Adjust RV103 as necessary for a reading on the DVM of 0 $\pm 2\mu$V.

4) Select slow mode, 4-wire, and 10M OHMS. Adjust RV102 as necessary for a reading on the DVM of 0 $\pm 20\mu$V. Return to step 3 and repeat if necessary.

5) Move the DVM lead from the end of R106 to monitor the voltage between the rear end of R126 and the ground-plane near IC301. Allow time for restabilization after lifting the cover. Adjust RV301 for a DVM reading of 0 $\pm 2\mu$V. Remove the DVM.

6) Make the calibration connections as shown in Figure 8-1. Select 0 OHMS.

7) Apply 10mA to the 2724A and note the reading on the DVM. Apply 1mA to the 2724A and adjust RV101 such that the DVM reading at 1mA is 1/10th of that at 10mA. (If both readings are $<5\mu$V, adjust RV101 as close as possible to 0V and proceed to step 8.)

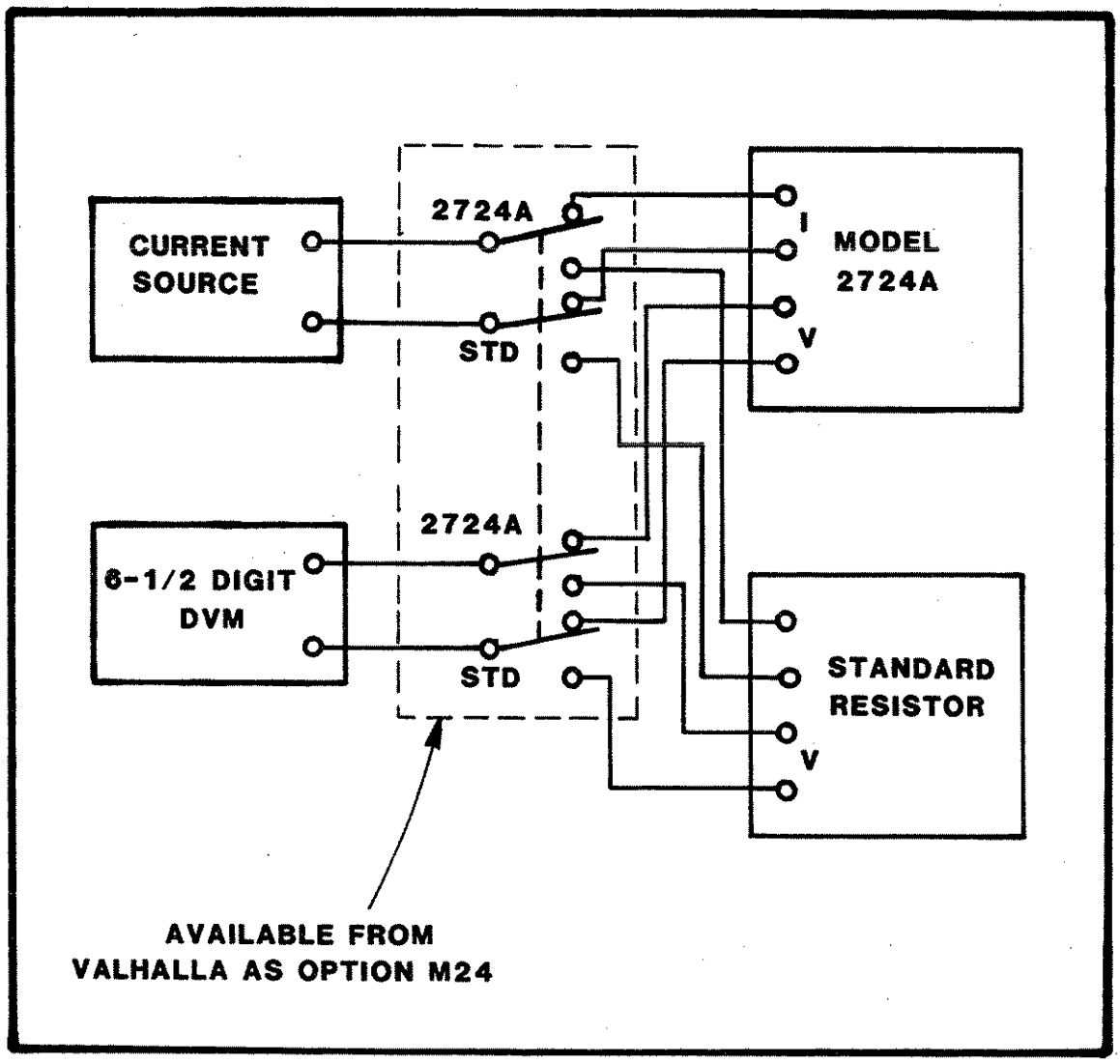

Figure 8-1. Calibration Equipment Connections

8) Select 100 OHMS. Apply 10mA and note the reading on the DVM. Apply 1mA and adjust RV103 such that the DVM reading at 1mA is 1/10th of that at 10mA.

8-4-2. External Calibration (Standard)

The external calibration procedure is the method by which the 2724A may "learn" its error and compensate for it in regular use. A series of pre-programmed "cal points" are used to correct for this error. The 2724A prompts the user as to which set of inputs is required. If the reader is unfamiliar with this procedure, it is recommended that he review Section 8-3-2 of this manual before proceeding.

NOTE: The 2724A must <u>not</u> have power removed while the rear panel calibration keyswitch is in the "CALIBRATE" position, as the calibration data may become corrupted.

The technician should note that a step may be skipped by pressing the **Ω**, **KΩ**, or **MΩ** key, as appropriate. However, all connections to the "**I**" terminals must be removed and the LOW CURRENT indicator illuminated before doing so to avoid the possibility of the 2724A receiving an erroneous input.

1) Make connections to the 2724A as shown in Figure 8-1. Turn the rear keyswitch to the "CALIBRATE" position.

2) **CAL 0Ω/30mA** With the switch box in the 2724A position, apply 30mA. Allow time for the reading on the DVM to settle. If the reading exhibits a negative offset, use the step controls to adjust the reading for 0V ±30μV. Press the **Ω** key to enter the correction. Proceed to step 3.

   If the reading exhibits a positive offset, enter **. 0 1 Ω** on the keyboard. Remove all connections from the "**I**" terminals and skip through all of the remaining steps as described above until the 2724A indicates **TURN CAL SW OFF**. At this point, press the **Ω** key once more and the cycle will be back at the starting point, but the offset will be negative. Return to the beginning of this step.

3) **CAL 100Ω/30mA** Switch the box back to the 100Ω standard resistor. Adjust the current source so that it is outputting exactly 30.0000mA. Switch the box back to the 2724A. Use the step controls to adjust the value of the 2724A so that the DVM indicates 3.00000 volts ±100μV. Press the **Ω** key to enter the correction (Do *not* turn off the step controls first).

✓ Switch back and forth between the standard resistor and the 2724A as necessary but *make sure that the current is being applied to the 2724A before entering the correction.* If the LOW CURRENT indicator is lit, the 2724A may not receive an accurate correction factor.

✓ A flashing "☼" indicates an overcurrent condition. Reduce the current or switch the box back to the standard resistor.

4) **CAL 1KΩ/10mA** Switch the box back to the 1KΩ standard resistor. Adjust the current source so that it is outputting exactly 10.0000mA. Switch the box back to the 2724A. Use the step controls to adjust the value of the 2724A so that the DVM indicates 10.00000 volts ±100μV. Press the **KΩ** key to enter the correction.

5) **CAL 10KΩ/1mA** Switch the box back to the 10KΩ standard resistor. Adjust the current source so that it is outputting exactly 1.00000mA. Switch the box back to the 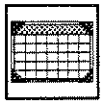

2724A. Use the step controls to adjust the value of the 2724A so that the DVM indicates 10.00000 volts ±100μV. Press the **KΩ** key to enter the correction.

6) **CAL 100KΩ/100μA** Switch the box back to the 100KΩ standard resistor. Adjust the current source so that it is outputting exactly 100.000μA. Switch the box back to the 2724A. Use the step controls to adjust the value of the 2724A so that the DVM indicates 10.00000 volts ±100μV. Press the **KΩ** key to enter the correction.

7) **CAL 1MΩ/10μA** Switch the box back to the 1MΩ standard resistor. Adjust the current source so that it is outputting exactly 10.0000μA. Switch the box back to the 2724A. Use the step controls to adjust the value of the 2724A so that the DVM indicates 10.00000 volts ±200μV. Allow extra time for settling at this cal point. Press the **MΩ** key to enter the correction.

8) **CAL 10MΩ/1μA** Switch the box back to the 10MΩ standard resistor. Adjust the current source so that it is outputting exactly 1.00000μA. Switch the box back to the 2724A. Use the step controls to adjust the value of the 2724A so that the DVM indicates 10.00000 volts ±200μV. Allow extra time for settling at this cal point. Press the **MΩ** key to enter the correction.

9) **CAL 100KΩ/1μA** Switch the box back to the 100KΩ standard resistor. Adjust the current source so that it is outputting exactly 1.0000μA. Switch the box back to the 2724A. Use the step controls to adjust the value of the 2724A so that the DVM indicates .100000 volts ±5μV. Allow extra time for settling at this cal point. Press the **KΩ** key to enter the correction.

10) **CAL 0Ω/30mA** Move the "**V**" leads of the 2724A to the "**I**" terminals (2-wire configuration). Apply 30mA and adjust the zero as discussed in step 2. Note: As this is a 2-wire configuration, high quality connections are important!

✓ After entering the correction, return the leads to the 4-wire configuration.

11) **APPLY 10mA** Switch the box back to the 1KΩ resistance standard and adjust the current source so that it is outputting exactly 10.0000mA. Switch the box back to the 2724A and allow the reading on the DVM to stabilize. There is no adjustment here but the reading should be 0V ±10μV. If not, recheck that the connections to the 2724A are the 4-wire configuration. Press the "**KΩ**" key *with the current applied* to enter the correction.

12) **APPLY 10mA** There is no adjustment here but the reading should be 10V ±100μV. Press the "**KΩ**" key *with the current applied* to enter the correction.

13) **FAST DATA OK**
CAL DATA OK
TURN CAL SW OFF
These messages indicate successful completion of the calibration procedure. Return the rear panel keyswitch to the OPERATE position.

NOTE: "NO FAST DATA" indicates an error was made in step 11 or 12. In this case, the 2724A uses the data already in memory. Any message other than "CAL DATA OK" indicates an error in performing the calibration procedure, or a fault in the instrument.

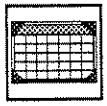

8-5. 2724A CPR Calibration Procedure

This section describes routine calibration of a 2724A equipped with Option CPR. It is recommended that the technician familiarize himself with Section 8-3 of this manual before proceeding.

8-5-1. Internal Adjustments (CPR)

The internal adjustments are most easily made using the calibration cover of Option M24. If the cover is lifted for any reason, allow 5 minutes for restabilization of the instrument before proceeding.

1) Monitor the voltage between the front panel V_{LO} and V_{HI} terminals with the DVM. Remove any connections to the "**I**" terminals and select 0 OHMS, active mode, and fast mode on the 2724A. Adjust RV201 for a DVM reading of 0 $\pm 50\mu$V.

2) Monitor the voltage between the front panel V_{LO} and V_{HI} terminals with the DVM. Remove any connections to the "**I**" terminals and select 100 OHMS, CPR mode, and slow mode. Adjust RV103 for a DVM reading of 0 $\pm 1\mu$V.

3) Monitor the voltage between the front panel V_{LO} and V_{HI} terminals with the DVM. Remove any connections to the "**I**" terminals and select 10M OHMS, CPR mode, and slow mode. Adjust RV102 for a DVM reading of 0 $\pm 20\mu$V.

4) Monitor the voltage between the front panel V_{LO} and V_{HI} terminals with the DVM. Select Active Mode, 0 OHMS, and Slow Mode. Alternately connect the source of 10mA and 1mA to the "**I**" terminals. The accuracy of the current source should be better than $\pm 0.5\%$ at each level.

   Adjust RV101 such that the DVM reading at 10mA is ten times (e.g. the same value of resistance) the DVM reading when 1mA is applied. Note: If both points are $<5\mu$V, adjust RV101 as close as possible for 0V.

5) Monitor the voltage between the front panel V_{LO} and V_{HI} terminals with the DVM.

a. Select 100 OHMS, CPR mode, and slow mode from the 2724A. Apply the source of 10mA current to the "**I**" terminals of the 2724A. Note the DVM reading in CPR mode. Select the active mode (press the **CARD PNT** key). Note the change in DVM reading (in μV) between the two modes of operation. Ensure sufficient time is given for the 2724A to settle before noting each DVM reading.

b. Repeat the measurements taken in step (a) above using 1mA instead of 10mA. Adjust RV301 such that the change in DVM reading at 1mA is 1/10th that at 10mA (within 1μV). Repeat (a) and (b) as required until no further adjustment is required.

Steps 1 through 5 should be repeated until no further adjustments are required. The 2724A is now ready for external calibration.

8-5-2. External Calibration (CPR)

The external calibration procedure is the method by which the 2724A may "learn" its error and compensate for it in regular use. A series of pre-programmed "cal points" are used to correct for this error. The 2724A prompts the user as to which set of inputs is required. If the reader is unfamiliar with this procedure, it is recommended that he review Section 8-3-2 of this manual before proceeding.

NOTE: The 2724A must <u>not</u> have power removed while the rear panel calibration keyswitch is in the "CALIBRATE" position, as the calibration data may become corrupted.

The technician should note that a step may be skipped by pressing the **Ω**, **KΩ**, or **MΩ** key, as appropriate. However, all connections to the "I" terminals must be removed and the LOW CURRENT indicator illuminated before doing so to avoid the possibility of the 2724A receiving an erroneous input.

1) Make connections to the 2724A as shown in Figure 8-1. Turn the rear keyswitch to the "CALIBRATE" position.

2) **CAL 0Ω/10mA** With the switch box in the 2724A position, apply 10mA. Allow time for the reading on the DVM to settle. If the reading exhibits a negative offset, use the step controls to adjust the reading for 0V ±30μV. Press the **Ω** key to enter the correction. Proceed to step 3.

   If the reading exhibits a positive offset, enter **. 0 1 Ω** on the keyboard. Remove all connections from the "**I**" terminals and skip through all of the remaining steps as described above until the 2724A indicates **TURN CAL SW OFF**. At this point, press the **Ω** key once more and the cycle will be back at the starting point, but the offset will be negative. Return to the beginning of this step.

3) **CAL 100Ω/10mA** Switch the box back to the 100Ω standard resistor. Adjust the current source so that it is outputting exactly 10.0000mA. Switch the box back to the 2724A. Use the step controls to adjust the value of the 2724A so that the DVM indicates 1.000000 volts ±10μV. Press the **Ω** key to enter the correction (Do *not* turn off the step controls first).

✓ Switch back and forth between the standard resistor and the 2724A as necessary but *make sure that the current is being applied to the 2724A before entering the correction.* If the LOW CURRENT indicator is lit, the 2724A may not receive an accurate correction factor.

✓ A flashing "☼" indicates an overcurrent condition. Reduce the current or switch the box back to the standard resistor.

4) **CAL 1KΩ/10mA** Switch the box back to the 1KΩ standard resistor. Adjust the current source so that it is outputting exactly 10.0000mA. Switch the box back to the 2724A. Use the step controls to adjust the value of the 2724A so that the DVM indicates 10.00000 volts ±100μV. Press the **KΩ** key to enter the correction.

5) **CAL 10KΩ/1mA** Switch the box back to the 10KΩ standard resistor. Adjust the current source so that it is outputting exactly 1.00000mA. Switch the box back to the 2724A. Use the step controls to adjust the value of the 2724A so that the DVM indicates 10.00000 volts ±100μV. Press the **KΩ** key to enter the correction.

6) **CAL 100KΩ/100μA** Switch the box back to the 100KΩ standard resistor. Adjust the current source so that it is outputting exactly 100.000μA. Switch the box back to the 2724A. Use the step controls to adjust the value of the 2724A so that the DVM indicates 10.00000 volts ±100μV. Press the **KΩ** key to enter the correction.

7) **CAL 1MΩ/10μA** Switch the box back to the 1MΩ standard resistor. Adjust the current 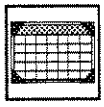

source so that it is outputting exactly 10.0000μA. Switch the box back to the 2724A. Use the step controls to adjust the value of the 2724A so that the DVM indicates 10.00000 volts $\pm$200μV. Allow extra time for settling at this cal point. Press the **MΩ** key to enter the correction.

8) **CAL 10MΩ/1μA** Switch the box back to the 10MΩ standard resistor. Adjust the current source so that it is outputting exactly 1.00000μA. Switch the box back to the 2724A. Use the step controls to adjust the value of the 2724A so that the DVM indicates 10.00000 volts $\pm$200μV. Allow extra time for settling at this cal point. Press the **MΩ** key to enter the correction.

9) **CAL 100KΩ/1μA** Switch the box back to the 100KΩ standard resistor. Adjust the current source so that it is outputting exactly 1.0000μA. Switch the box back to the 2724A. Use the step controls to adjust the value of the 2724A so that the DVM indicates .100000 volts $\pm$5μV. Allow extra time for settling at this cal point. Press the **KΩ** key to enter the correction.

10) **CAL 0Ω/10mA** Move the "**V**" leads of the 2724A to the "**I**" terminals (2-wire configuration). Apply 10mA and adjust the zero as discussed in step 2. Note: As this is a 2-wire configuration, the reading will be sensitive to contact resistances and cable resistances. High quality connections are important.

✓ After entering the correction, return the leads to the 4-wire configuration.

11) **APPLY 10mA** Switch the box back to the 1KΩ resistance standard and adjust the current source so that it is outputting exactly 10.0000mA. Switch the box back to the 2724A and allow the reading on the DVM to stabilize. There is no adjustment here but the reading should be 0V $\pm$10μV. If not, recheck that the connections to the 2724A are the 4-wire configuration. Press the "**KΩ**" key *with the current applied* to enter the correction.

12) **APPLY 10mA** There is no adjustment here but the reading should be 10V $\pm$100μV. Press the "**KΩ**" key *with the current applied* to enter the correction.

13) **CPR 100Ω/CAL** Switch the box to the 100Ω resistance standard and adjust the current source so that it is outputting exactly 10.0000mA. Switch the box back to the 2724A and allow the reading on the DVM to stabilize.

At this point the exact value of the cardinal point is calculated using Ohm's Law (R=V÷I). For example, if the DVM reading is 1.00471 volts, the value of the resistance is calculated as follows:

1.00471V ÷ 0.01A = **100.471Ω**

This value is entered into memory using the keypad and the **Ω** key. All steps use this basic method for calculating the value of the cardinal points. **Be sure to press the correct key for Ω, KΩ and MΩ.** This value becomes the one that is displayed when a cardinal point is called up in actual use.

14) **CPR 1KΩ/CAL** Switch the box to the 1KΩ resistance standard and adjust the current source so that it is outputting exactly 10.0000mA. Switch the box back to the 2724A and 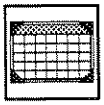

allow the reading on the DVM to stabilize. Calculate the exact value of the cardinal point as shown in step 13 and enter it using the **KΩ** key.

15) **CPR 10KΩ/CAL** Switch the box to the 10KΩ resistance standard and adjust the current source so that it is outputting exactly 1.00000mA. Switch the box back to the 2724A and allow the reading on the DVM to stabilize. Calculate the exact value of the cardinal point as shown in step 13 and enter it using the **KΩ** key.

16) **CPR 100KΩ/CAL** Switch the box to the 100KΩ resistance standard and adjust the current source so that it is outputting exactly 100.000μA. Switch the box back to the 2724A and allow the reading on the DVM to stabilize. Calculate the exact value of the cardinal point as shown in step 13 and enter it using the **KΩ** key.

17) **CPR 1MΩ/CAL** Switch the box to the 1MΩ resistance standard and adjust the current source so that it is outputting exactly 10.0000μA. Switch the box back to the 2724A and allow the reading on the DVM to stabilize. Calculate the exact value of the cardinal point as shown in step 13 and enter it using the **MΩ** key.

18) **CPR 10MΩ/CAL** Switch the box to the 10MΩ resistance standard and adjust the current source so that it is outputting exactly 1.00000μA. Switch the box back to the 2724A and allow the reading on the DVM to stabilize. Calculate the exact value of the cardinal point as shown in step 13 and enter it using the **MΩ** key.

19) **FAST DATA OK**
CAL DATA OK
TURN CAL SW OFF

These messages indicate successful completion of the calibration procedure. Turn the rear keyswitch to the OPERATE position.

NOTE: "NO FAST DATA" indicates an error was made in step 11 or 12. In this case, the 2724A uses the data already in memory. Any message other than "CAL DATA OK" indicates an error in performing the calibration procedure, or a fault in the instrument.

8-6. Calibration Via the GPIB

The external calibration procedure may be performed using either the front panel controls or the GPIB commands if Option TL-1 has been installed. The applicable codes include the step controls, the numeric keypad, and retrieval of the configuration status word.

The code "**N**" may be sent to sequence the 2724A to the next cal point (replaces the manual **Ω**, **KΩ** and **MΩ** keys). The present cal point may be determined by retrieving the configuration status word as described in Section 7-12.

SECTION IX THEORY OF OPERATION

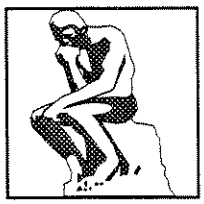

9-1. Troubleshooting

Apparent malfunctions are often the result of misinterpretation of specifications or due to an incomplete understanding of the instrument. **A thorough review of the operating instructions for this instrument is recommended prior to any component replacement.** Check to be sure that cables and other test equipment are in good working order before attempting to troubleshoot the 2724A.

If the Model 2724A exhibits problems that cannot be eliminated by reviewing Section 6, the following guidelines have been established to help solve the problem.

9-1-1. Localizing the Problem

The key to successful troubleshooting is to localize the problem as much as possible before trying to pin the problem down to a specific component.

Certain questions should be asked such as "Does the problem occur on all ranges or on a specific range only?". The power supplies are also one of the first things that should be checked.

As it is not possible to anticipate all failure modes of the 2724A, servicing personnel should become familiar with this section of the manual to gain a complete understanding of the internal workings of this instrument.

9-1-2. Troubleshooting Guide

As a servicing aid, the troubleshooting chart below lists a number of fault symptoms and the possible causes. If the exhibited fault symptom is not shown or a check of the possible causes does not locate the source of the problem then it will be necessary to employ normal troubleshooting procedures.

SYMPTOM	POSSIBLE FAULT AREA
All decimal points displayed.	CPU or ROM failure; Address decode.
All middle segments displayed.	RAM failure.
"OUT OF CAL" displayed.	Unit miscalibrated; Reference resistor bad; MDAC bad.
"CAL DATA BAD" displayed.	Bad NOVRAM.
"CLOCK FAILURE" displayed.	Incorrect display multiplex frequency; Y501 or IC527 bad.
"CANNOT CONTROL" displayed.	Unit miscalibrated; MDAC bad; A to D Convertor bad.
"MEMORY DATA BAD" displayed.	If repeated after cycling power, NOVRAM bad.
"A TO D TIMEOUT" displayed.	Noisy test current; A to D Convertor bad; Unit miscalibrated; Unit in overcurrent, but overcurrent circuitry bad.
No display or LEDs.	Faulty line power or fuse; Power Supply bad; Clock bad; Display circuitry bad. CPU bad; Address decode bad.
Large errors on all ranges.	Relays powered up in wrong position - cycle power and try again; Check measuring equipment; A to D convertor bad; REF buffer bad; RLB bad.
Large errors on one range only.	Relays powered up in wrong position - cycle power and try again; Reference resistor bad; Relay bad; Unit miscalibrated.
Error, increasing with higher value.	Excessive leakage in test leads; REF buffer bad.
Noise, all ranges.	A to D convertor bad; REF buffer bad; Check measuring equipment.
Noise, particularly on higher values.	Reverse leads to measuring equipment; REF buffer bad.
Output stuck at rail, no input.	Variable gain amplifier.
"SETTLING" always displayed.	Noisy test current - try fast mode; A to D convertor bad; MDAC bad.

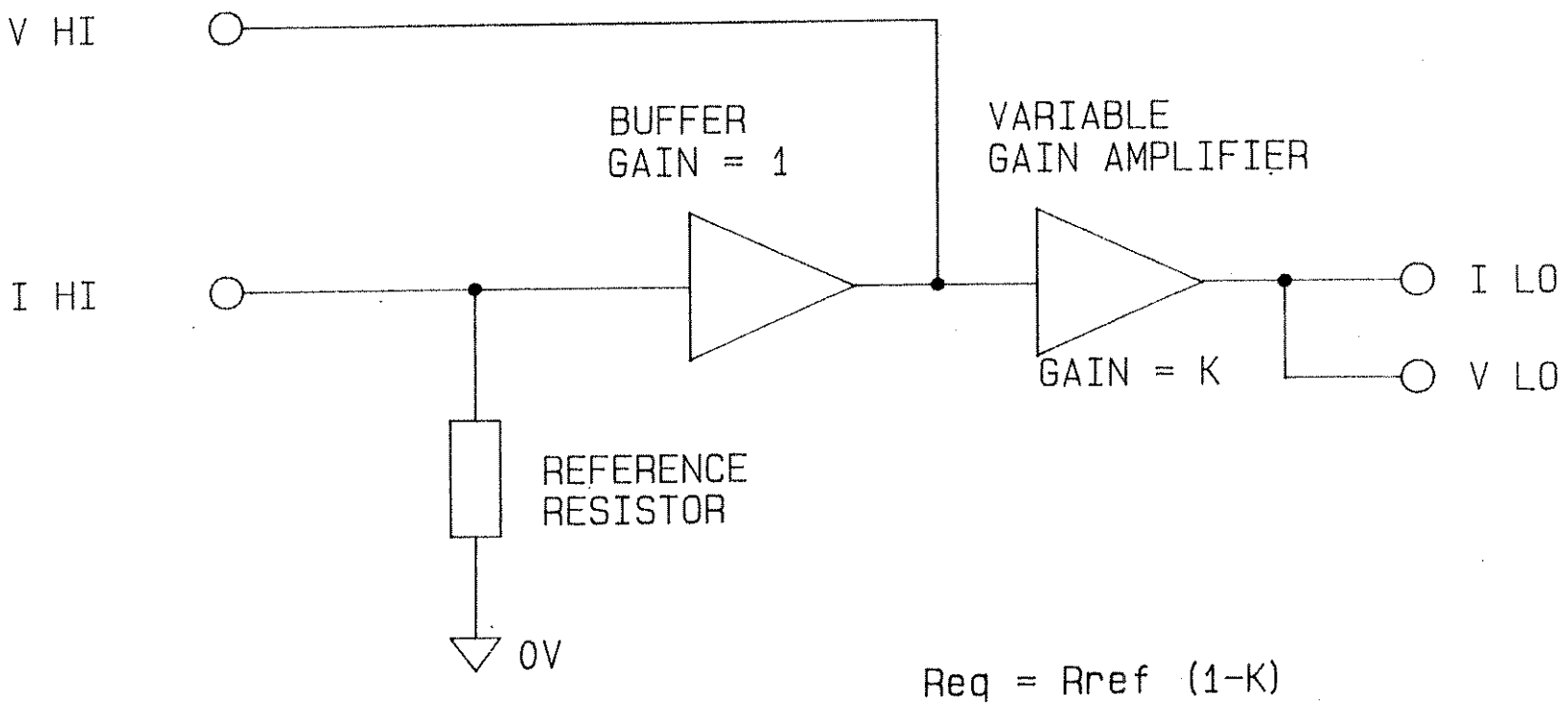

Figure 9-1. "Active Ohms" Block Diagram

9-2. Functional Descriptions

The "active ohm" technique used in the 2724A is a unique analog circuit providing stability and high accuracy for a wide range of values and conditions.

Referring to the block diagram in Figure 9-1, the current (I) from the measuring device flows into the I HI terminal of the 2724A, through the reference resistor (R_{REF}), into the internal 0V of the 2724A and returns via the output of the variable gain amplifier to the I LO terminal. Thus, the voltage across the reference resistor is $I \cdot R_{REF}$ (and thus the voltage at the V HI and I HI terminals).

With the variable gain amplifier at a gain of K ($0<K<1$) the voltage at the I LO terminal (and thus the V LO terminal) is $K \cdot I \cdot R_{REF}$. Therefore, it can be seen that the voltage between the V HI and LO terminals is given by $I \cdot R_{REF} \cdot (1-K)$, thus simulating a resistor of value ($R_{REF} \cdot (1-K)$.

The digital circuitry in the 2724A is present to control I/O operations, set the required R_{REF} and K, and to check the exact value of K (correcting any errors present) by utilizing the A-to-D convertor.

9-3. Detailed Circuit Descriptions

The descriptions that follow are designed to make troubleshooting to component level possible. It is assumed that the reader has a basic knowledge of electronics and is familiar with the operation of the 2724A as described in Section 6. The referenced drawings are located at the back of this manual.

9-3-1. Reference Resistors

Resistors R121 through R126 are the precision reference resistors used in the 2724A. As can be seen in schematic 2724-070 sheet 1, the actual reference resistor(s) in use are selected by the relays RLA, RLB, RLC, RLD, RLE and RLF. The relay selections are shown in Table 9-1.

Table 9-1. Selection of Reference Resistors

Resistance Range (Ω)	RLA	RLB	RLC	RLD	RLE	RLF	Reference Resistor(s) Used by This Range
0 to 120	Off	On	Off	Off	On	On	R124 (100Ω)
0.12K to 1.2K	Off	On	Off	On	Off	Off	R124 + R123 (1KΩ)
1.2K to 12K	Off	On	On	Off	Off	Off	R124 + R123 + R122 (10KΩ)
12K to 120K	On	On	Off	Off	Off	Off	R124 + R123 + R122 + R121 (100KΩ)
0.12M to 1.2M	Off	Off	Off	Off	On	On	R126 (1MΩ)
1.2M to 12M	Off	Off	Off	Off	Off	Off	R126 + R125 (10MΩ)
12M to 11G	Off	Off	*	*	Off	Off	R126 + R125 (10MΩ)

* See 9-3-2-2 for action of RLC and RLD above 12MΩ.

9-3-2. Reference Buffer

These paragraphs describe the operation of the reference buffer circuitry as shown on the schematic drawing number 2724-070 sheet 1.

9-3-2-1. Unity Gain Buffer

The unity gain buffer is formed by the amplifier IC101. IC101 is powered by ±5V supplies as formed by IC104, IC105 and IC106. The ground of the regulators is referenced to the input of IC104.

IC104 simply buffers the voltage developed across the reference resistor and forces the output of IC101 to follow this voltage. This amplifier's output is also used to detect an overcurrent situation by means of D103 and D104 conducting when the voltage exceeds 13.7V. This turns on the LED part of the opto-isolator IC411 which informs the μP of the overcurrent.

IC101 is also connected as a unity-gain non-inverting buffer which drives the V_{HI} terminal, reference resistor guarding, and also the variable gain amplifier (for values below 12MΩ). The input offset and input leakage current of this section are corrected for by the adjustment of RV103 and RV102, respectively.

At the input to this section is a selectable filter formed by RLL, C112, and C111. This filter is selected by the Slow or Fast mode of the 2724A as determined by the user. In slow mode RLL is on, thus using C111 as the filter. In fast mode RLL is off, thus using C111 and C112 as the filter.

At the output of this section is an adjustment (switched on by RLG when the Ohms Multiplier is not in use) RV101 which is used to compensate for thermal EMFs on RLG and R101.

9-3-2-2. Ohms Multiplier

In order to avoid the necessity of reference resistors above 10MΩ, the effective value of the reference resistor is multiplied by a factor of 10, 100 or 1000 by the "Ohms Multiplier" circuitry. This unique circuit is formed by the amplifiers IC102 and IC103, the feedback resistor network R114, and the relays RLG, RLH and RLJ.

For values below 12MΩ this circuit is bypassed by RLG being off. For values between 12MΩ and 120MΩ, the multiplier is set to a gain of 10 by RLG being on, RLH being on and RLJ being off. Note that RLH and RLC are driven in tandem as are RLJ and RLD. For values between .12GΩ and 1.2GΩ the multiplier is set to a gain of 100 by RLG being on, RLH being off and RLJ being on. For values between 1.2GΩ and 11GΩ the multiplier is set to a gain of 1000 by RLG being on, RLH being off and RLJ being off.

The multiplier formed by IC102 and IC103 is a two-stage amplifier combining the offset voltage characteristics of IC103 with the output swing capability of IC102. The output of IC102 is also used to detect overcurrent by means of D101 and D102 conducting when the output exceeds 13.7V. This turns on the LED portion of IC411 in a similar manner to that described in previously in 9-3-2-1.

9-3-3. Variable Gain Amplifier

The variable gain amplifier is controlled by the microprocessor and has a precise gain selectable from 0 to unity. It is composed of two sections, the MDAC's and the output buffer. The schematic for this section is located on drawing number 2724-070 sheet 2.

9-3-3-1. MDAC's

There are two virtually identical MDAC's (Multiplying D-to-A Convertors) in the 2724A. These are formed by IC201 and IC202 (most significant DAC) and IC203 and IC204 (least significant DAC). The only difference between these parts is the accuracy of the DAC device used.

Each MDAC is a 12-bit (i.e., 1 in 4096 resolution) device using the output of the REF buffer as its reference voltage input. The output of each MDAC is buffered and converted into a voltage by IC202 or IC204. The gain of each MDAC is adjusted by the digital codes present on the inputs D1 (least significant) to D12 (most significant). If the gain is considered as a number K (between 0 to 4095), then the output of IC202 (or IC204) is given by the formula $K \cdot V_{REF}/4096$ (where V_{REF} is the voltage on the reference input). The MDAC's are powered by a +8V rail regulated from the +18V rail by IC206.

9-3-3-2. Output Buffer

The output buffer is an inverting summing amplifier that sums the outputs of the two MDAC's with a 1000:1 weighting as defined by the ratio of R202:R201.

When the input current is less than ≈10mA, the amplifier IC205 is used directly to drive the V_{LO} and I_{LO} terminals. At 10mA and above, a high-power buffer amplifier IC207 is inserted into the output path of IC205 to sink (or source) the required current.

The output of the Output Buffer is protected by the two 15V zener diodes D203 and D204.

If the 2724A has OPTION CPR fitted, IC207 is deleted and the NO (Normally Open) contact E20 of RLK is now used to select CPR mode of operation. In this mode V_{LO} and I_{LO} are shorted to 0V, thus the output value is that of the selected reference resistor. With RLK off the 2724A operates normally, however it may only provide 12mA of current, hence the reduced current specifications for a 2724A equipped with Option CPR.

The actual output of the Variable Gain Amplifier is monitored by the A-to-D convertor through R210 (filtered by C203) in order to monitor the gain. The microprocessor (μP) uses this information to adjust the output value to a precise level.

In an overcurrent condition, the μP pulses TR210 in order to force the output to a high voltage to ensure that auto-ranging DVM's which require 20V (or more) to up-range will do so. This condition is indicated by a flashing "✲" on the display.

9-3-4. Analog to Digital Convertor

The A-to-D convertor is shown on schematic 2724-070 sheet 3 and is composed of four sections:

9-3-4-1. Pre-Scaling and Input Multiplexing

The input to the A-to-D convertor is selected from one of three sources ($0V_{sig}$, the REFERENCE output, or the V_{LO} INPUT monitor) by the analog multiplexer IC301. This signal (the output of IC301) is pre-scaled to within 4 to 13V by the amplifier IC302, gain defining resistors R301-308, and multiplexer IC303.

Both multiplexers are controlled by the μP in order to calculate the ratio between the output of the REFERENCE buffer and the voltage on the V_{LO} terminal, thus eliminating zero errors.

9-3-4-2. Reference Voltage Generator

The reference voltage for the A-to-D convertor (V_{REF}) is generated by IC307 and is 6.95V nominal. The A-to-D convertor requires both positive and negative reference voltages thus the reference is inverted by amplifier IC308 to produce the required negative voltage. RLM is used to select the reference polarity based on the polarity of the input current to the 2724A.

9-3-4-3. FET Switch Drives

The A-to-D convertor requires two high-speed FET switch drivers. These are both essentially identical and are composed of IC309 in combination with TR303, R319-R321, and C304 for the TR302 drive; or TR304, R326-R328 and C305 for the TR301 drive. These drivers take the TTL level signal (REF DRIVE) and provide the wide voltage swing required to switch the FETs TR301 and TR302.

9-3-4-4. Current Balance

The currents passed through R309 (from the input), R317 (from the reference) and R318 (from the FET switches) are summed in the integrator IC304. Any imbalance in these currents will cause the output of IC304 to change, thus causing the comparator IC305 to change also.

The output of this comparator is synchronized to clock and feed back to drive the REF DRIVE line, thus causing the current through R318 to be altered. The 667Hz input to the A to D convertor through C301 and R310 forces the convertor to operate continuously at a frequency which is independent of the input. This synchronization is performed in the μP circuitry of Section 9-3-6.

Under normal operating conditions the output of IC304 will be a distorted triangle wave and the output of IC305 will be a TTL level square wave with a duty cycle proportional to its input voltage. The waveform at the junction of TR301, TR302 and R318 will also be a square wave with levels of 0V and V_{REF} (V_{REF} will be -6.95V with a positive input, +6.95V with a negative input).

9-3-5. Isolation

All of the sections described previously are floating with respect to earth ground, the common being driven to the common voltage of the measuring device. All of the I/O and μP circuitry in the 2724A is referenced to earth ground, thus isolation is required between these two parts of the 2724A. This is achieved by the circuitry shown in schematic 2724-070 sheet 4.

The circuitry employs opto-isolators IC401 - IC413 to isolate all of the signals passing between the floating and earthy circuitry of the 2724A. IC414 and TR403 - TR406 are used to drive the relays via the outputs of the opto-isolators. TR401 is used to drive the 667Hz clock to the A-to-D convertor. TR402 is used to drive TR201 in the Variable Gain Amplifier.

The discrete and network resistors on the earthy side of the opto-isolators are for current definition of the LED's in the opto-isolators. The discreet and network resistors on the floating side of the opto-isolators are pull-ups for the opto-isolator outputs.

9-3-6. Microprocessor (μP)

The microprocessor portion of the 2724A is shown in schematic 2724-070 sheet 5 and is in five sections:

9-3-6-1. A-to-D Convertor Logic

The logic for synchronization of the current balance output to the main clock and the accumulation of A-to-D convertor measurements is

performed by IC501 - IC509 in combination with the μP under software control. The opto-isolated output of the current balance is first passed through an exclusive-OR gate in IC503 which is used to invert and/or buffer this signal dependent on the polarity of input current. This signal is now synchronized with the 12.8MHz clock and de-bounced by IC501, IC502 and parts of IC503 and IC504. The Q output of IC502 is used as the REF DRIVE signal for the FET switch drivers in the A-to-D convertor (after isolation). The Q^{NOT} output is gated with the clock by IC504b to generate a count signal for the 16-bit counter formed by IC506 and IC507. Due to the already described operation of the A-to-D convertor, this signal will be a group of clock pulses every 1.333ms, with the number of pulses being proportional to the input voltage to the A-to-D convertor at that time.

IC505 is used to produce a pair of pulses immediately following each of these groups of pulses. The first pulse is used to latch the count in the 16-bit counter into latches IC508 and IC509. The second is used to clear the 16-bit counter to zero, ready for the next group of pulses. Thus, at 667Hz, the latches IC508 and IC509 are updated with the latest 16-bit measurement taken by the A-to-D convertor.

The second pulse from IC505 is also used to interrupt the μP, informing it that a new measurement may be read from the latches. The μP then accumulates these measurements until sufficient resolution is obtained.

9-3-6-2. Opto-Isolator Latches/Drivers

The opto-isolators are driven by several latches IC514 - IC517 and IC526 with the required data. The μP loads the data into these latches by simply "writing" the 8-bit data into them, each being at a defined address.

9-3-6-3. Microprocessor (μP)

The microprocessor is an 8-bit device running from a 6.4MHz MPU clock divided from the main 12.8MHz clock. It is beyond the scope of this manual to fully describe the operation of the μP and thus the user is referred to the many data sheets and books available on this device.

The connections to the μP fall into four main groups:

1) The Address Bus (A0 through A15)

This 16-bit parallel bus contains the address of the device or memory location to be read from or written to. It is not used as a tri-state bus nor is the μP ever halted, thus these bus signals should always be at one of the two logic levels 0 or +5V, except during transition.

2) The Data Bus (D0 through D7)

This 8-bit parallel bus contains the data read from/written to the device whose address is present on the address bus. This *is* a tri-state bus and various voltage levels will be seen on these lines. IC511 buffers this bus for use by the MOS devices that are unable to use tri-state TTL levels.

3) Control Bus ($\varnothing$ and R)

This paragraph describes the two control lines $\varnothing$ and R. "$\varnothing$" is a 1.6MHz clock that is a divided version of the 6.4MHz MPU clock applied to the μP. All bus activities take place on the 5V → 0V falling edge transition of this signal.

"R" is the read/write control signal and is a 1 (5V) while the μP is reading data and is a 0 (0V) when writing data. Neither of these two signals are tri-state and thus are always at one of the two logic levels.

4) Interrupts (RESET, NMI, FIRQ, IRQ)

There are four interrupts used by the μP:

RESET This line is normally pulled to +5V by R503, but is held low for approximately 300mS by C503 after applying power to the 2724A. This action causes initialization of the CPU and restarts the software upon application of power.

NMI This line is normally at a logic 1 but goes to a 0 when a new measurement is available from the A-to-D convertor.

FIRQ This line is normally at a logic 1 and is driven from the display drive circuitry to indicate that the next position in the display is to be updated.

IRQ This line is normally at +5V, being pulled-up by R504. It is used by the IEEE-488 interface to indicate that an IEEE bus action has taken place.

9-3-6-4. Address Decode

The decoders IC524 and IC525 perform the decoding of the address bus and direct the information on the data bus to the various devices and memory locations. Only the lines A9 to 15 are used and the decode is synchronized to the CPU clock by IC708.

9-3-6-5. Memory

The memories in the 2724A are: ROM (IC519 - 8K×8 EPROM); static RAM (IC520 and IC521 - 1K×4 each, organized as 1K×8); and non-volatile RAM a.k.a. NOVRAM (IC522 and IC523 - 256×4 each, organized as 256x8). Each of these has its address range decoded by IC524.

The NOVRAM IC522 is used to hold the calibration data for the 2724A and thus has its write control switched by the rear calibration keyswitch. IC523 is used to hold the user-programmable memory data such as IEEE address and pre-programmed resistance values and has its read/write controlled by the μP.

9-3-7. Clocks, Display and Keyboard

The schematic for these paragraphs is shown on drawing number 2724-070 sheet 6. The various clock frequencies required by the 2724A are divided from a basic 12.8007 MHz signal generated by Y501 and IC527. This clock is then divided down in sequence by IC528 (giving 128KHz) and IC529 (giving 667Hz).

The display is a 16-digit, 14-segment vacuum fluorescent (VFD) type and is multiplexed at 2.66KHz by the main system clock. The display itself is mounted on the Display PCB behind the front-panel and is shown on schematic 2724-071.

The circuitry that drives this display is shown on drawing number 2724-070 sheet 6. The grid of each digit is pulled up sequentially by IC703 and IC704 to +37V as defined by decoder IC705 and inverters IC706 and IC707. Each time a new digit is turned on, the latch (IC532) is set by the clock thus blanking the display and interrupting the μP. The μP responds by writing the new data for that decade into latches IC512 and IC513 which loads IC701 and IC702 with the new data for each individual segment of the new display digit. The μP then clears the latch IC532, and reloads it with the data for the next digit. The front-panel LEDs DS702 to DS708 are driven by the spare output of the 16-bit latch IC513 and buffered by TR701.

The keyboard formed by the front-panel switches shown on schematic

2724-071 are also multiplexed along with the display. Each decade of the display causes a column of four switches to be enabled. The μP checks for depressed switches by monitoring the rows via buffer IC510.

9-3-8. IEEE-488 Interface

This Optional PCB may be mounted on the rear-panel of the 2724A. The circuitry contained on this PCB is shown on schematic 2724-072. IC3 and IC4 buffer the 2724A from the actual GPIB bus lines. IC2 is the bus transceiver. The 2724A data bus is buffered from the GPIB data bus by IC2.

An exact description of the operation of the IEEE-488 bus is beyond the scope of this manual and user is referred to IEEE Standard 488 if more information is required.

9-3-9. Power Supplies

The circuitry providing the various power rails for the 2724A is shown on schematic 2724-070 sheet 7. The main power transformer, T1, provides the stepped-down AC voltages required to produce the DC supplies.

All supplies are basically produced in the same manner. The AC voltages from all of the transformer secondaries are rectified by diodes D601 through D606, providing either full or half-wave rectification. The supplies are then regulated by IC regulators IC601 through IC606. Capacitors C601 through C613 are used to smooth the voltages.

SECTION X SPECIAL PROCEDURES

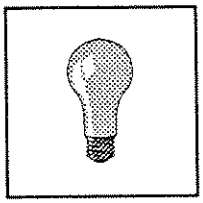

10-1. General

This section contains a number of tips and special procedures that will assist the user in obtaining maximum utility from the Model 2724A.

10-2. Non-DC Test Currents

As can be seen in the specifications, the 2724A in the Active Mode requires approximately 1 second to respond to a change in test current. While this is not a problem with ohmmeters that use a pure DC test current, many high performance instruments such as the HP3458A use pulsed or switching currents to perform the measurement and may get erroneous readings.

Have no fear! The 2724A incorporates a feature that enables it to be used with these types of ohmmeters with a minimum of changes in the operating procedure. Ohmmeters that generate pulsed test currents should utilize the 2724A's Fast Mode and/or CPR mode (if fitted). More details as to the differences in operation in these modes are discussed in Section 6 of this manual.

10-3. Using the 2724A with a Wheatstone Bridge

The Wheatstone bridge technique for comparing two 4-terminal resistors will not work with the Valhalla Model 2724A. This is because all of the current must pass through the current (I) terminals of the unit. Thus, the lead compensation current would cause an error as shown in Figure 10-1. Using the system for comparing the Model 2724A in the 2-Wire mode will work, but has greater inherent errors.

10-4. Using the 2724A with High Resistance Meters

Several hints are provided here to help when using the Model 2724A above 12MΩ.

1. Note the maximum usable test currents as stated in Section 2.

2. Output noise is significantly worse when used with a constant-current source rather than a constant-voltage source.

3. Great care must be taken with regard to leakage. Regular PVC wire does not provide sufficient insulation. Teflon or polyethylene insulation should be used.

4. Care should be taken to minimize line pick-up. Outer shields of coaxial cables, LO terminals of meters, etc., **must be taken to low impedance nodes.** If unstable indications are observed, try reversing the leads to the meter. Also, the movement of people or equipment in the test area can cause significant noise pick-up.

10-5. Using the 2724A with Active-Feedback Current Sources

Some ohmmeters utilize an active technique of ohms measurement and may not operate properly with the equivalent circuit of the 2724A. In general, the use of "CPR" mode (if fitted) or "fast" mode is recommended. If this is not possible, it has been found that a 0.1μF to 1μF capacitor (preferably Polycarbonate or Polystyrene) across the "I" terminals will usually prevent problems.

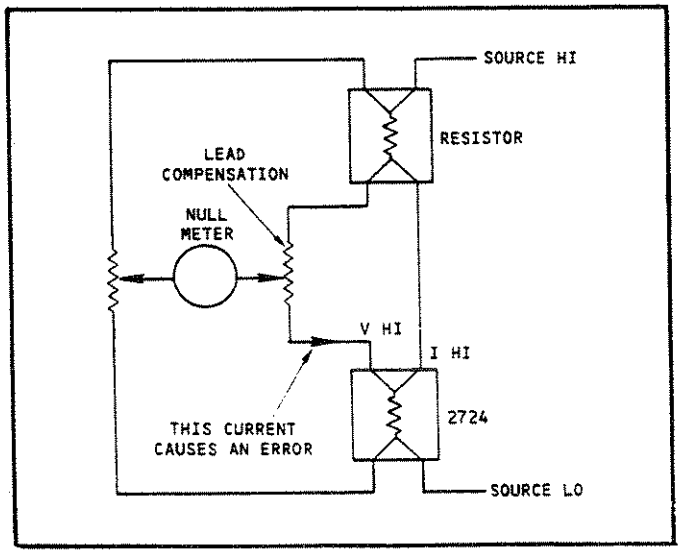

Figure 10-1. Wheatstone Bridge Error

10-6. Line Noise Pick-Up

Some multimeters have poor line interference rejection when operated as an ohmmeter, thus care must be taken to reduce line pick-up. In extreme cases (e.g., when AC line cables run close to input cables) it may be found beneficial to place a capacitor across the I terminals to produce a 100ms time constant. It may also be beneficial to reverse the leads since some DMM's have better rejection on one terminal than the other (e.g., Guildline 9574 and Solartron 7060 should have cable shields taken to HI).

10-7. Thermal Voltage Offset Errors

Section 2 of this manual lists a specification for the maximum "Noise and Thermals" of the 2724A. It may be noticed that only 4-wire operation is specified. The typical 2-wire thermal offsets are $\pm 20\mu V$. This figure (and the other figures quoted) will cause apparent errors on some ohmmeters. The user is advised to ensure that the 2724A is in a thermally-stable environment and the leads between the 2724A and the meter under test are of good quality and are the "low thermal EMF" type (Valhalla Option SL-48) in order to reduce this effect as much as possible.

In severe cases the user may reverse the connections to the meter under test and take the average of the two ohmmeter readings. This will eliminate any thermal EMF error, leaving only the effects caused by noise (typically $< 1\mu V$ in CPR mode, $< 3\mu V$ in ACTIVE mode).

SECTION XI MANUAL CHANGES AND ADDENDUMS

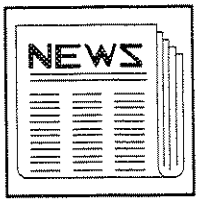

If no addendums follow this page, your manual is correct as printed.

SECTION XII PARTS LISTS

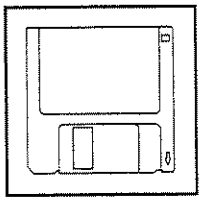

The following parts lists are included in this manual:

2724-600	7 pages	2724A Main Board Assembly
2724-406	1 page	2724A Option "CPR" Installation
2724-601	1 page	2724A Display Board Assembly
2724-603	1 page	2724A Keyboard Assembly
2724-400	2 pages	2724A Final Assembly
2724-602	1 page	Option TL-1 IEEE Board Assembly
2724-403	1 page	Option M24 Maintenance Kit

REF.DES.	STOCK #	QUANTITY A	T	N	DESCRIPTION	MANUFACTURING/PURCHASING DATA	ALTERNATE
150	05-10007	2			Terminal, turret, swage	Useco 1300B-1	
152	90-04004	3			#4-40 x 1/4" Phil Pan S.S.		
153	90-06006	4			#6-32 x 3/8" Phil Pan S.S.		
154	98-06001	4			#6 Split Lock Washer,STD,S.S.		
155	97-06001	4			#6-32 Hex Nut, Small Pattern, Stainless-Steel		
156	97-04001	3			#4-40 Radio Hex Nut S.S.		
157	98-04001	3			#4 Split Lock Washer S.S.		
162	05-10449	1			Cable tie, 14"x.15"	Panduit PLT41-M	
164	80-03630	12			30awg Wire, Blue Kynar	MIL-W-81822/6-A30-6	
A1	04-30081	1			2724A Main Board	DWG 2724-700	
C101	02-60002	1			0.1uF 250V Mylar	Illinois 104MSR250K	
C102	02-90002	1			0.5u 5% 50V Polycarbonate	IMB RA7A504J	
C103	02-20013	1			100pF 500V Mica	CM05FD101J03	
C104	02-60002	1			0.1uF 250V Mylar	Illinois 104MSR250K	
C105	02-60002	1			0.1uF 250V Mylar	Illinois 104MSR250K	
C106	02-20009	1			470p 500V Mica	CM05FD471J03	
C107	02-60002	1			0.1uF 250V Mylar	Illinois 104MSR250K	
C108	02-60002	1			0.1uF 250V Mylar	Illinois 104MSR250K	
C109	02-30000	1			4.7uF 16V Tantalum Bead	TAP475K016SP	
C110	02-30000	1			4.7uF 16V Tantalum Bead	TAP475K016SP	
C111	02-90005	1			0.1uF 5% 50V Polycarbonate	IMB RA7A104J	
C112	02-20018	1			33p 500V Mica	CM05FD330J03	
C201	02-30002	1			33uF 10V Tantalum Bead	IDC336K010NLF	
C202	02-10002	1			500pF 100V Ceramic Disc	SPRAGUE 56AT50	
C203	02-60002	1			0.1uF 250V Mylar	Illinois 104MSR250K	
C204	02-20018	1			33p 500V Mica	CM05FD330J03	
C301	02-60002	1			0.1uF 250V Mylar	Illinois 104MSR250K	
C302	02-90001	1			0.05u 5% 50V Polycarbonate	IMB RA7A503J	
C303	02-20013	1			100pF 500V Mica	CM05FD101J03	
C304	02-20013	1			100pF 500V Mica	CM05FD101J03	
C305	02-20013	1			100pF 500V Mica	CM05FD101J03	
C501	02-20019	1			200p 500V Mica	CM05FD201J03	
C502	02-20019	1			200p 500V Mica	CM05FD201J03	
C503	02-30002	1			33uF 10V Tantalum Bead	IDC336K010NLF	
C504	02-30002	1			33uF 10V Tantalum Bead	IDC336K010NLF	
C601	02-40013	1			470uF 50V Aluminum	Illinois 477TTA050	
C602	02-40016	1			22,000uF 10V Aluminum Capacitor	Illinois 229TTA010M	
C603	02-40030	1			220uF 16V Alum. Radial	Illinois 227RS0M016M	
C604	02-40013	1			470uF 50V Aluminum	Illinois 477TTA050	
C605	02-40017	1			2200u 35V Aluminum	Illinois 228TTA035	
C606	02-40017	1			2200u 35V Aluminum	Illinois 228TTA035	
C607	02-40004	1			2200uF 16V Aluminum	Illinois 228TTA016	
C608	02-40014	1			100u 25V Aluminum	Illinois 107TTA025	
C609	02-40014	1			100u 25V Aluminum	Illinois 107TTA025	
C610	02-30002	1			33uF 10V Tantalum Bead	IDC336K010NLF	
C611	02-30001	1			10uF 25V Tantalum Bead	AVX TAP106K025SP	
C612	02-30001	1			10uF 25V Tantalum Bead	AVX TAP106K025SP	
C613	02-30001	1			10uF 25V Tantalum Bead	AVX TAP106K025SP	
C901	02-60004	1			0.01u 630V Mylar	ILL. 103MSR630K	
C902	02-60004	1			0.01u 630V Mylar	ILL. 103MSR630K	
C903	02-60004	1			0.01u 630V Mylar	ILL. 103MSR630K	

REF.DES.	STOCK #	QUANTITY A	QUANTITY T	QUANTITY N	DESCRIPTION	MANUFACTURING/PURCHASING DATA	ALTERNATE
C904	02-60004	1			0.01u 630V Mylar	ILL. 103MSR630K	
C905	02-60004	1			0.01u 630V Mylar	ILL. 103MSR630K	
C906	02-60004	1			0.01u 630V Mylar	ILL. 103MSR630K	
C907	02-60004	1			0.01u 630V Mylar	ILL. 103MSR630K	
C908	02-60004	1			0.01u 630V Mylar	ILL. 103MSR630K	
C909	02-60004	1			0.01u 630V Mylar	ILL. 103MSR630K	
C910	02-60004	1			0.01u 630V Mylar	ILL. 103MSR630K	
C911	02-60004	1			0.01u 630V Mylar	ILL. 103MSR630K	
C912	02-60004	1			0.01u 630V Mylar	ILL. 103MSR630K	
C913	02-60004	1			0.01u 630V Mylar	ILL. 103MSR630K	
C914	02-60004	1			0.01u 630V Mylar	ILL. 103MSR630K	
C915	02-60004	1			0.01u 630V Mylar	ILL. 103MSR630K	
C916	02-60004	1			0.01u 630V Mylar	ILL. 103MSR630K	
C917	02-60004	1			0.01u 630V Mylar	ILL. 103MSR630K	
C918	02-60004	1			0.01u 630V Mylar	ILL. 103MSR630K	
C919	02-60004	1			0.01u 630V Mylar	ILL. 103MSR630K	
C920	02-60004	1			0.01u 630V Mylar	ILL. 103MSR630K	
C921	02-60004	1			0.01u 630V Mylar	ILL. 103MSR630K	
C922	02-60004	1			0.01u 630V Mylar	ILL. 103MSR630K	
C923	02-60004	1			0.01u 630V Mylar	ILL. 103MSR630K	
DS1	05-01011	1			LED,Red,Panel Mount	Micro Elec. MRB51D	
D101	03-20042	1			Diode,Zener,10V, 1W, 10%	1N4740	
D102	03-20042	1			Diode,Zener,10V, 1W, 10%	1N4740	
D103	03-20042	1			Diode,Zener,10V, 1W, 10%	1N4740	
D104	03-20042	1			Diode,Zener,10V, 1W, 10%	1N4740	
D203	03-20029	1			Diode, zener, 15V, 10%, 5watts	1N5352A	
D204	03-20029	1			Diode, zener, 15V, 10%, 5watts	1N5352A	
D401	03-20000	1			Diode, general purpose	1N4148 or 1N914	
D402	03-20000	1			Diode, general purpose	1N4148 or 1N914	
D403	03-20000	1			Diode, general purpose	1N4148 or 1N914	
D404	03-20000	1			Diode, general purpose	1N4148 or 1N914	
D405	03-20000	1			Diode, general purpose	1N4148 or 1N914	
D406	03-20000	1			Diode, general purpose	1N4148 or 1N914	
D407	03-20000	1			Diode, general purpose	1N4148 or 1N914	
D408	03-20000	1			Diode, general purpose	1N4148 or 1N914	
D409	03-20000	1			Diode, general purpose	1N4148 or 1N914	
D501	03-20000	1			Diode, general purpose	1N4148 or 1N914	
D601	03-20027	1			Bridge, 1A, 100V	3N247	
D602	03-20049	1			Diode, Rectifier, 3A, 50v	Motorola MR500	
D603	03-20049	1			Diode, Rectifier, 3A, 50v	Motorola MR500	
D604	03-20027	1			Bridge, 1A, 100V	3N247	
D605	03-20002	1			Diode, rectifier, 1A, 50V	1N4001-1N4007	
D606	03-20002	1			Diode, rectifier, 1A, 50V	1N4001-1N4007	
D607	03-20042	1			Diode,Zener,10V, 1W, 10%	1N4740	
HIC207	04-10477	1			2724A Modified TO-66 Heat Sink	DWG 2724-214 using 05-10292	
HIC601	05-10058	1			Heatsink, TO3, 1 1/4" high	Thermalloy 6004B-2	
HIC602	05-10211	1			Heatsink, TO220	Thermalloy 6106B-14	
HIC603	05-10211	1			Heatsink, TO220	Thermalloy 6106B-14	
HIC604	05-10211	1			Heatsink, TO220	Thermalloy 6106B-14	
IC101	03-30111	1			Precision chopper amplifier	Intersil ICL7650CPD or equiv.	03-30336
IC102	03-30090	1			General Purpose JFET Op-Amp	LF356N or H	03-30074

REF.DES.	STOCK #	QUANTITY A	QUANTITY T	QUANTITY N	DESCRIPTION	MANUFACTURING/PURCHASING DATA	ALTERNATE
IC103	03-30111	1			Precision chopper amplifier	Intersil ICL7650CPD or equiv.	03-30336
IC104	03-30527	1			Electrometer Op Amp	Analog Devices AD549JH	
IC105	03-30168	1			Regulator, +5V, 100mA, TO92	78L05ACLP	
IC106	03-30169	1			Regulator, -5V, 100mA, TO92	79L05CLP	
IC201	03-30329		1		Precision 12-Bit Multiplying D to A	7541JN	
IC202	03-30170	1			Low Noise, low drift Op-amp	OP07DP	
IC203	03-30167		1		12-bit multiplying D to A convertor	7521LN	03-30329
IC204	03-30090	1			General Purpose JFET Op-Amp	LF356N or H	03-30074
IC205	03-30170	1			Low Noise, low drift Op-amp	OP07DP	
IC206	03-30085	1			Regulator,+8V,0.5A,TO202 or TO220	78M08CP or LM340T-8.0	
IC207	03-30190	1			High power,unity gain current booster	Motorola MC1438R	
IC301	03-30330	1			8 to 1 CMOS Analog Switch	DG508ACJ	
IC302	03-30166	1			General Purpose JFET Op-amp	LF411CN	
IC303	03-30330	1			8 to 1 CMOS Analog Switch	DG508ACJ	
IC304	03-30170	1			Low Noise, low drift Op-amp	OP07DP	
IC305	03-30073	1			Comparator,JFET	LF311H or TL311	
IC306	03-30170	1			Low Noise, low drift Op-amp	OP07DP	
IC307	03-30122	1			6.95V 1% Precision reference	National or Lin. Tech. LM399H or AH	
IC308	03-30090	1			General Purpose JFET Op-Amp	LF356N or H	03-30074
IC309	03-30173	1			Hex inverter open collector (30V)	7406	
IC310	03-30090	1			General Purpose JFET Op-Amp	LF356N or H	03-30074
IC401	03-30185	1			Quad general purpose Opto-isolator	Litronix ILQ-74A	
IC402	03-30185	1			Quad general purpose Opto-isolator	Litronix ILQ-74A	
IC403	03-30185	1			Quad general purpose Opto-isolator	Litronix ILQ-74A	
IC404	03-30185	1			Quad general purpose Opto-isolator	Litronix ILQ-74A	
IC405	03-30185	1			Quad general purpose Opto-isolator	Litronix ILQ-74A	
IC406	03-30185	1			Quad general purpose Opto-isolator	Litronix ILQ-74A	
IC407	03-30185	1			Quad general purpose Opto-isolator	Litronix ILQ-74A	
IC408	03-30185	1			Quad general purpose Opto-isolator	Litronix ILQ-74A	
IC409	03-30093	1			Very High Speed Opto-Isolator	Hewlett Packard HCPL-2601	
IC410	03-30186	1			Dual high speed opto-isolator	Hewlett Packard HCPL-2630	
IC411	03-30185	1			Quad general purpose Opto-isolator	Litronix ILQ-74A	
IC412	03-30185	1			Quad general purpose Opto-isolator	Litronix ILQ-74A	
IC413	03-30185	1			Quad general purpose Opto-isolator	Litronix ILQ-74A	
IC414	03-30173	1			Hex inverter open collector (30V)	7406	
IC501	03-30338	1			Dual D-Type Flip Flop	74ALS74N	
IC502	03-30338	1			Dual D-Type Flip Flop	74ALS74N	
IC503	03-30010	1			Quad Exclusive OR	7486N	
IC504	03-30174	1			Quad 2 Input OR	7432N	
IC505	03-30175	1			Dual retriggerable monostable	74LS123N	
IC506	03-30176	1			Dual 4-bit binary counter	74LS393N	
IC507	03-30176	1			Dual 4-bit binary counter	74LS393N	
IC508	03-30177	1			Octal 3-state latch	74ALS374N or 74LS374N	
IC509	03-30177	1			Octal 3-state latch	74ALS374N or 74LS374N	
IC510	03-30156	1			Octal 3-State Buffer	74ALS541N or 74LS541N	03-30401
IC511	03-30162	1			Octal Bus Transceiver	74LS245N	
IC512	03-30177	1			Octal 3-state latch	74ALS374N or 74LS374N	
IC513	03-30177	1			Octal 3-state latch	74ALS374N or 74LS374N	
IC514	03-30177	1			Octal 3-state latch	74ALS374N or 74LS374N	
IC515	03-30177	1			Octal 3-state latch	74ALS374N or 74LS374N	
IC516	03-30177	1			Octal 3-state latch	74ALS374N or 74LS374N	

REF.DES.	STOCK #	QUANTITY A	QUANTITY T	QUANTITY N	DESCRIPTION	MANUFACTURING/PURCHASING DATA	ALTERNATE
IC517	03-30177	1			Octal 3-state latch	74ALS374N or 74LS374N	
IC518	03-30187		1		Microprocessor (1.5MHz)	MC68A09P	
IC519	03-50019		1		2724A IC519 Main ROM (Standard)	Made from 03-30198	
IC520	03-30188		1		1Kx4 RAM (350ns,low power)	2114-35NL	
IC521	03-30188		1		1Kx4 RAM (350ns,low power)	2114-35NL	
IC522	03-30189		1		256x4 NOVRAM	Xicor or NCR 2212	
IC523	03-30189		1		256x4 NOVRAM	Xicor or NCR 2212	
IC524	03-30155	1			Binary to 1 of 8 decoder	74ALS138N or 74LS138N	
IC525	03-30182	1			Binary to 1 of 16 decoder	74LS154N	
IC526	03-30177	1			Octal 3-state latch	74ALS374N or 74LS374N	
IC527	03-30199	1			Voltage controlled oscillator	74LS624N	
IC528	03-30181	1			Dual decade counter	74LS490N	
IC529	03-30180	1			Modulo-12 counter	74LS92N	
IC530	03-30176	1			Dual 4-bit binary counter	74LS393N	
IC531	03-30002	1			Quad 2 input NAND	7400N	
IC532	03-30095	1			Dual D-Type Flip Flop	74LS74N or 74ALS74N (ALT 03-30338)	
IC601	03-30042	1			Regulator,+5V,1.5A,TO3	7805CK or LM340K-5.0	
IC602	03-30171	1			Regulator, +18V, 1.0A, TO220	Motorola MC7818CT	
IC603	03-30172	1			Regulator, -18V, 1.0A, TO220	Motorola MC7918CT	
IC604	03-30034	1			Regulator,+5V,0.5A,TO202 or TO220	78M05CP or LM340T-5.0	
IC605	03-30034	1			Regulator,+5V,0.5A,TO202 or TO220	78M05CP or LM340T-5.0	
IC606	03-30169	1			Regulator, -5V, 100mA, TO92	79L05CLP	
IC701	03-30183	1			Octal vacuum flourescent display driver	Dionics DI513B or DI514B	
IC702	03-30183	1			Octal vacuum flourescent display driver	Dionics DI513B or DI514B	
IC703	03-30183	1			Octal vacuum flourescent display driver	Dionics DI513B or DI514B	
IC704	03-30183	1			Octal vacuum flourescent display driver	Dionics DI513B or DI514B	
IC705	03-30182	1			Binary to 1 of 16 decoder	74LS154N	
IC706	03-30184	1			Hex invertor	74ALS04N or 74LS04N	
IC707	03-30184	1			Hex invertor	74ALS04N or 74LS04N	
IC708	03-30184	1			Hex invertor	74ALS04N or 74LS04N	
R101	01-01061	1			10K 5% 1/4W Carbon Film	RC07GF103J	
R102	01-01100	1			1M 5% 1/4W Carbon Film	RC07GF105J	
R103	01-01021	1			100 5% 1/4W Carbon Film	RC07GF101J	
R104	01-01081	1			100K 5% 1/4W Carbon Film	RC07GF104J	
R105	01-01086	1			220K 5% 1/4W Carbon Film	RC07GF224J	
R106	01-01053	1			4.7K 5% 1/4W Carbon Film	RC07GF472J	
R107	01-01021	1			100 5% 1/4W Carbon Film	RC07GF101J	
R108	01-01128	1			1000M 5% 1/4W Carbon Film	RC07GF108J	
R109	01-01041	1			1K 5% 1/4W Carbon Film	RC07GF102J	
R110	01-01081	1			100K 5% 1/4W Carbon Film	RC07GF104J	
R111	01-01081	1			100K 5% 1/4W Carbon Film	RC07GF104J	
R112	01-01021	1			100 5% 1/4W Carbon Film	RC07GF101J	
R113	01-10198	1			10K 1% 10ppm/C 1/8W Metal Film	PRP 1/8W - 10K - 1% - 10PPM	
R114	01-30018	1			1000/100/10:1 Divider Network	Caddock 1776-14	
R115	01-01021	1			100 5% 1/4W Carbon Film	RC07GF101J	
R116	01-01041	1			1K 5% 1/4W Carbon Film	RC07GF102J	
R117	01-01081	1			100K 5% 1/4W Carbon Film	RC07GF104J	
R118	01-01081	1			100K 5% 1/4W Carbon Film	RC07GF104J	
R119	01-01021	1			100 5% 1/4W Carbon Film	RC07GF101J	
R120	01-10160	1			10K 5% 50ppm/C 1W Metal Film	RC32GF103K	
R121	01-20113	1			2724A Resistor Specifications	DWG 2724-012	

REF.DES.	STOCK #	QUANTITY A	QUANTITY T	QUANTITY N	DESCRIPTION	MANUFACTURING/PURCHASING DATA	ALTERNATE
R122	01-20112	1			2724A Resistor Specifications	DWG 2724-013	
R123	01-20111	1			2724A Resistor Specifications	DWG 2724-014	
R124	01-20110	1			2724A Resistor Specifications	DWG 2724-015	
R125	01-20115	1			9M 1% 5ppm/C Film	Caddock TF050R-9M-1%-5PPM	
R126	01-20114	1			2724A Resistor Specifications	DWG 2724-011	
R127	01-01007	1			10 5% 1/4W Carbon Film	RC07GF100J	
R128	01-01041	1			1K 5% 1/4W Carbon Film	RC07GF102J	
R129	01-01026	1			220 5% 1/4W Carbon Film	RC07GF221J	
R201	01-10198	1			10K 1% 10ppm/C 1/8W Metal Film	PRP 1/8W - 10K - 1% - 10PPM	
R202	01-01119	1			10M 5% 1/4W Carbon Film	RC07GF106J	
R203	01-10161	1			47.5K 1% 50ppm/C 1/4W Metal Film	RN60C4702F	
R204	01-01061	1			10K 5% 1/4W Carbon Film	RC07GF103J	
R205	01-01081	1			100K 5% 1/4W Carbon Film	RC07GF104J	
R206	01-10199	1			15K 1% 10ppm/C 1/8W Metal Film	PRP 1/8W - 15K - 1% - 10PPM	
R207	01-01041	1			1K 5% 1/4W Carbon Film	RC07GF102J	
R208	01-01007	1			10 5% 1/4W Carbon Film	RC07GF100J	
R209	01-01007	1			10 5% 1/4W Carbon Film	RC07GF100J	
R210	01-01061	1			10K 5% 1/4W Carbon Film	RC07GF103J	
R301	01-01062	1			12K 5% 1/4W Carbon Film	RC07GF123J	
R302	01-01056	1			6.2K 5% 1/4W Carbon Film	RC07GF622J	
R303	01-01050	1			3.3K 5% 1/4W Carbon Film	RC07GF332J	
R304	01-01043	1			1.5K 5% 1/4W Carbon Film	RC07GF152J	
R305	01-01038	1			750 5% 1/4W Carbon Film	RC07GF751J	
R306	01-01031	1			390 5% 1/4W Carbon Film	RC07GF391J	
R307	01-01025	1			200 5% 1/4W Carbon Film	RC07GF201J	
R308	01-01025	1			200 5% 1/4W Carbon Film	RC07GF201J	
R309	01-10006	1			100K 1% 50ppm/C 1/4W Metal Film	RN60C1003F	
R310	01-01081	1			100K 5% 1/4W Carbon Film	RC07GF104J	
R311	01-01051	1			3.9K 5% 1/4W Carbon Film	RC07GF392J	
R312	01-01021	1			100 5% 1/4W Carbon Film	RC07GF101J	
R313	01-01033	1			470 5% 1/4W Carbon Film	RC07GF471J	
R314	01-01061	1			10K 5% 1/4W Carbon Film	RC07GF103J	
R315	01-01082	1			120K 5% 1/4W Carbon Film	RC07GF124J	
R316	01-01007	1			10 5% 1/4W Carbon Film	RC07GF100J	
R317	01-10200	1			249K 1% 50ppm/C 1/4W Metal Film	RN60C2493F	
R318	01-10201	1			45.3K 1% 50ppm/C 1/4W Metal Film	RN60C4532F	
R319	01-01081	1			100K 5% 1/4W Carbon Film	RC07GF104J	
R320	01-01061	1			10K 5% 1/4W Carbon Film	RC07GF103J	
R321	01-01026	1			220 5% 1/4W Carbon Film	RC07GF221J	
R322	01-01033	1			470 5% 1/4W Carbon Film	RC07GF471J	
R323	01-01045	1			2K 5% 1/4W Carbon Film	RC07GF202J	
R324	01-10011	1			40.2K 1% 50ppm/C 1/4W Metal Film	RN60C4022F	
R325	01-10011	1			40.2K 1% 50ppm/C 1/4W Metal Film	RN60C4022F	
R326	01-01081	1			100K 5% 1/4W Carbon Film	RC07GF104J	
R327	01-01026	1			220 5% 1/4W Carbon Film	RC07GF221J	
R328	01-01061	1			10K 5% 1/4W Carbon Film	RC07GF103J	
R329	01-01033	1			470 5% 1/4W Carbon Film	RC07GF471J	
R330	01-01047	1			2.4K 5% 1/4W Carbon Film	RC07GF242J	
R401	01-01061	1			10K 5% 1/4W Carbon Film	RC07GF103J	
R402	01-01061	1			10K 5% 1/4W Carbon Film	RC07GF103J	
R403	01-01030	1			330 5% 1/4W Carbon Film	RC07GF331J	

REF.DES.	STOCK #	QUANTITY A	T	N	DESCRIPTION	MANUFACTURING/PURCHASING DATA	ALTERNATE
R404	01-01030	1			330 5% 1/4W Carbon Film	RC07GF331J	
R405	01-01030	1			330 5% 1/4W Carbon Film	RC07GF331J	
R406	01-01030	1			330 5% 1/4W Carbon Film	RC07GF331J	
R407	01-01030	1			330 5% 1/4W Carbon Film	RC07GF331J	
R408	01-01030	1			330 5% 1/4W Carbon Film	RC07GF331J	
R409	01-01041	1			1K 5% 1/4W Carbon Film	RC07GF102J	
R410	01-01051	1			3.9K 5% 1/4W Carbon Film	RC07GF392J	
R411	01-01061	1			10K 5% 1/4W Carbon Film	RC07GF103J	
R501	01-01061	1			10K 5% 1/4W Carbon Film	RC07GF103J	
R502	01-01061	1			10K 5% 1/4W Carbon Film	RC07GF103J	
R503	01-01061	1			10K 5% 1/4W Carbon Film	RC07GF103J	
R504	01-01061	1			10K 5% 1/4W Carbon Film	RC07GF103J	
R505	01-01061	1			10K 5% 1/4W Carbon Film	RC07GF103J	
R506	01-01021	1			100 5% 1/4W Carbon Film	RC07GF101J	
R601	01-10165	1			2K 5% 50ppm/C 1W Metal Film	RC32GF202K	
R602	01-01061	1			10K 5% 1/4W Carbon Film	RC07GF103J	
R706	01-01041	1			1K 5% 1/4W Carbon Film	RC07GF102J	
R707	01-01041	1			1K 5% 1/4W Carbon Film	RC07GF102J	
RN401	01-40001	1			8 x 470 Network	A-B 316B-471	
RN402	01-40001	1			8 x 470 Network	A-B 316B-471	
RN403	01-40001	1			8 x 470 Network	A-B 316B-471	
RN404	01-40001	1			8 x 470 Network	A-B 316B-471	
RN405	01-40001	1			8 x 470 Network	A-B 316B-471	
RN406	01-40003	1			15 x 10K Network	A-B 316A-103	
RN407	01-40003	1			15 x 10K Network	A-B 316A-103	
RN408	01-40003	1			15 x 10K Network	A-B 316A-103	
RV101	01-50028	1			50K Top Adjust	Beckman 68WR50K	
RV102	01-50028	1			50K Top Adjust	Beckman 68WR50K	
RV103	01-50028	1			50K Top Adjust	Beckman 68WR50K	
RV201	01-50028	1			50K Top Adjust	Beckman 68WR50K	
RV301	01-50040	1			5K Top Adjust	Beckman 68WR5K	
RLA	05-03089	1			Relay, 4 form A, 5V	Aromat S4EB-5V	
RLB	05-03083	1			Relay,2A+2B,5V	Aromat,S2EB-5V	
RLC	05-03089	1			Relay, 4 form A, 5V	Aromat S4EB-5V	
RLD	05-03089	1			Relay, 4 form A, 5V	Aromat S4EB-5V	
RLE	05-03089	1			Relay, 4 form A, 5V	Aromat S4EB-5V	
RLF	05-03047	1			Relay,Reed,2 Form A,5V	Coto,CR3402-5-81	
RLG	05-03083	1			Relay,2A+2B,5V	Aromat,S2EB-5V	
RLH	05-03089	1			Relay, 4 form A, 5V	Aromat S4EB-5V	
RLJ	05-03089	1			Relay, 4 form A, 5V	Aromat S4EB-5V	
RLK	05-03083	1			Relay,2A+2B,5V	Aromat,S2EB-5V	
RLL	05-03089	1			Relay, 4 form A, 5V	Aromat S4EB-5V	
RLM	05-03072	1			Relay, 2PDT, 5V, 1500V breakdown	Aromat DS2E-S-DC5V	
RLN	05-03083	1			Relay,2A+2B,5V	Aromat,S2EB-5V	
SK2	05-10310	6			Socket, right angle, 10 way, gold	Molex 22-16-2101	
SK3	05-10294	1			Socket, dil, 20 pin	Burndy DILB20P-108	
TR201	03-10000	1			N-Channel JFET	U1899E or PN4392	
TR301	03-10000	1			N-Channel JFET	U1899E or PN4392	
TR302	03-10000	1			N-Channel JFET	U1899E or PN4392	
TR303	03-10010	1			PNP Transistor (TO92)	2N4402	
TR304	03-10010	1			PNP Transistor (TO92)	2N4402	

REF.DES.	STOCK #	QUANTITY A	T	N	DESCRIPTION	MANUFACTURING/PURCHASING DATA	ALTERNATE
TR401	03-10026	1			N-Channel VMOS (TO92)	VN10KM	
TR402	03-10026	1			N-Channel VMOS (TO92)	VN10KM	
TR403	03-10026	1			N-Channel VMOS (TO92)	VN10KM	
TR404	03-10010	1			PNP Transistor (TO92)	2N4402	
TR405	03-10026	1			N-Channel VMOS (TO92)	VN10KM	
TR406	03-10026	1			N-Channel VMOS (TO92)	VN10KM	
TR701	03-10010	1			PNP Transistor (TO92)	2N4402	
XIC201	05-10293	1			Socket, dil, 18 pin	Burndy DILB18P-108	
XIC203	05-10293	1			Socket, dil, 18 pin	Burndy DILB18P-108	
XIC518	05-10246	1			Socket, dil, 40 pin	Burndy DILB40P-11	
XIC519	05-10295	1			Socket, dil, 28 pin	Burndy DILB28P-108	
XIC520	05-10293	1			Socket, dil, 18 pin	Burndy DILB18P-108	
XIC521	05-10293	1			Socket, dil, 18 pin	Burndy DILB18P-108	
XIC522	05-10293	1			Socket, dil, 18 pin	Burndy DILB18P-108	
XIC523	05-10293	1			Socket, dil, 18 pin	Burndy DILB18P-108	
XIC701	05-10293	1			Socket, dil, 18 pin	Burndy DILB18P-108	
XIC702	05-10293	1			Socket, dil, 18 pin	Burndy DILB18P-108	
XIC703	05-10293	1			Socket, dil, 18 pin	Burndy DILB18P-108	
XIC704	05-10293	1			Socket, dil, 18 pin	Burndy DILB18P-108	
Y501	05-02002	1			Crystal,12.8007MHz,0.005%	HC18-12.8007MHz-.005%	

Parts List: 2724-406 Option "CPR" Installation

Reference Designator	Valhalla Stk #	Description
DELETE AND JUMPER:		
R210	01-01061	10KΩ, 5%, ¼W Carbon Film Resistor
DELETE:		
IC207	03-30190	Current Booster
HIC207	04-10477	Heatsink, TO-66IC
		Screw, Phillips, Pan S.S. (2)
		Nut, Radio Hex (2)
		Washer, Split Lock (2)
	05-03069	Keycap "4-Wire"
	05-03069	Keycap "Slow Mode"
C203	02-60002	Capacitor, Mylar, 0.1μF, 100V
IC519	03-50019	2724A Main ROM (Standard)
R330	01-01047	2.4KΩ, 5%, ¼W Carbon Resistor
ADD:		
	05-03087	CPR Keycap Set (PPM DEV replaces 4-WIRE) (CARD PNT replaces SLOW MODE)
(see note)	80-02018	Wire, Black Teflon, 18AWG
IC519	03-50126	2724A Main ROM (CPR)
R330	01-01043	1.5KΩ, 5%, ¼W Carbon Resistor

NOTE: Connect E20 to E21 with black 18AWG wire.

REF.DES.	STOCK #	QUANTITY A	T	N	DESCRIPTION	MANUFACTURING/PURCHASING DATA	ALTERNATE
A2	04-30082	1			2724A Display Board	DWG 2724-701	
DS701	05-01022	1			Display,V-F,14 Seg.,16 Digit	Itron,FG169B2	
IC703	03-30164	1			Hex buffer open collector (30V)	7407	
IC704	03-30164	1			Hex buffer open collector (30V)	7407	
R701	01-01081	1			100K 5% 1/4W Carbon Film	RC07GF104J	
R702	01-01021	1			100 5% 1/4W Carbon Film	RC07GF101J	
R703	01-01041	1			1K 5% 1/4W Carbon Film	RC07GF102J	
R704	01-01041	1			1K 5% 1/4W Carbon Film	RC07GF102J	
R705	01-01041	1			1K 5% 1/4W Carbon Film	RC07GF102J	
R706	01-01041	1			1K 5% 1/4W Carbon Film	RC07GF102J	
RN701	01-40000	1			15 x 100K network	A-B 316A-104	
RN702	01-40000	1			15 x 100K network	A-B 316A-104	
SK2	05-10332	6			Wafer, 10 pin, 1.23 l, gold, 0.1" spacing	CA CA-S-105P-230T-1.23	
SK3	05-10321	2			Socket, 10 way, bottom entry, gold	Molex 22-17-2102	

REF.DES.	STOCK #	QUANTITY A T N	DESCRIPTION	MANUFACTURING/PURCHASING DATA	ALTERNATE
8	05-03085	1	2724A Key Cap Specifications	ASSY 2724-208	
10	05-10446	2	Spacer, 5/16 dia, 1/4 lg, #10	RAF 1155-10-A-0	
11	05-10447	2	Spacer, 1/4 dia, 1/8 lg, swage-in, #6	RAF 1531-E-6-A-0	
12	05-10198	7	Spacer, 1/4 dia, 1/8 lg, #4, nylon	Smith 8880	
14	04-10355	2	2724A Keyboard Stiffener Bar	DWG 2724-206	
15	90-04004	4	#4-40 x 1/4" Phil Pan S.S.		
16	97-04001	4	#4-40 Radio Hex Nut S.S.		
17	98-04001	4	#4 Split Lock Washer S.S.		
A4	04-30085	1	2724A Keyboard	DWG 2724-703	
DS701	05-01028	1	LED,Red,Panel Mount	Hewlett Packard,HLMP3301	
DS702	05-01028	1	LED,Red,Panel Mount	Hewlett Packard,HLMP3301	
DS703	05-01028	1	LED,Red,Panel Mount	Hewlett Packard,HLMP3301	
DS704	05-01028	1	LED,Red,Panel Mount	Hewlett Packard,HLMP3301	
DS705	05-01028	1	LED,Red,Panel Mount	Hewlett Packard,HLMP3301	
DS706	05-01028	1	LED,Red,Panel Mount	Hewlett Packard,HLMP3301	
DS707	05-01028	1	LED,Red,Panel Mount	Hewlett Packard,HLMP3301	
PL3	05-10332	2	Wafer, 10 pin, 1.23 l, gold, 0.1" spacing	CA CA-S-105P-230T-1.23	
S1	05-03060	1	Switch Body, Black, Momentary, DPDT	ITT Schadow 71882	
S2	05-03060	1	Switch Body, Black, Momentary, DPDT	ITT Schadow 71882	
S3	05-03060	1	Switch Body, Black, Momentary, DPDT	ITT Schadow 71882	
S4	05-03060	1	Switch Body, Black, Momentary, DPDT	ITT Schadow 71882	
S5	05-03060	1	Switch Body, Black, Momentary, DPDT	ITT Schadow 71882	
S6	05-03060	1	Switch Body, Black, Momentary, DPDT	ITT Schadow 71882	
S7	05-03060	1	Switch Body, Black, Momentary, DPDT	ITT Schadow 71882	
S8	05-03060	1	Switch Body, Black, Momentary, DPDT	ITT Schadow 71882	
S9	05-03060	1	Switch Body, Black, Momentary, DPDT	ITT Schadow 71882	
S10	05-03060	1	Switch Body, Black, Momentary, DPDT	ITT Schadow 71882	
S11	05-03060	1	Switch Body, Black, Momentary, DPDT	ITT Schadow 71882	
S12	05-03060	1	Switch Body, Black, Momentary, DPDT	ITT Schadow 71882	
S13	05-03060	1	Switch Body, Black, Momentary, DPDT	ITT Schadow 71882	
S14	05-03060	1	Switch Body, Black, Momentary, DPDT	ITT Schadow 71882	
S15	05-03060	1	Switch Body, Black, Momentary, DPDT	ITT Schadow 71882	
S16	05-03060	1	Switch Body, Black, Momentary, DPDT	ITT Schadow 71882	
S17	05-03060	1	Switch Body, Black, Momentary, DPDT	ITT Schadow 71882	
S18	05-03060	1	Switch Body, Black, Momentary, DPDT	ITT Schadow 71882	
S19	05-03060	1	Switch Body, Black, Momentary, DPDT	ITT Schadow 71882	
S20	05-03060	1	Switch Body, Black, Momentary, DPDT	ITT Schadow 71882	
S21	05-03060	1	Switch Body, Black, Momentary, DPDT	ITT Schadow 71882	
S22	05-03060	1	Switch Body, Black, Momentary, DPDT	ITT Schadow 71882	
S23	05-03060	1	Switch Body, Black, Momentary, DPDT	ITT Schadow 71882	
S24	05-03060	1	Switch Body, Black, Momentary, DPDT	ITT Schadow 71882	
S25	05-03060	1	Switch Body, Black, Momentary, DPDT	ITT Schadow 71882	
S26	05-03060	1	Switch Body, Black, Momentary, DPDT	ITT Schadow 71882	
S27	05-03060	1	Switch Body, Black, Momentary, DPDT	ITT Schadow 71882	
S28	05-03060	1	Switch Body, Black, Momentary, DPDT	ITT Schadow 71882	
S29	05-03060	1	Switch Body, Black, Momentary, DPDT	ITT Schadow 71882	

REF.DES.	STOCK #	QUANTITY A	QUANTITY T	QUANTITY N	DESCRIPTION	MANUFACTURING/PURCHASING DATA	ALTERNATE
6	04-10844	1			2724 Butch Plate	DWG 2724-219	
7	04-10470	1			2724A Front Panel (screened)	DWG 2724-100 using 04-10315	
8	04-10316	1			2724A Rear Panel	DWG 2724-201	
9	04-10458	2			2724A Side Rail	DWG 2724-215	
10	04-10827		1		2701C/2724A Top Cover (vinyl clad)	DWG 2701-223	
12	04-10333	4			Standard Bezel	DWG 2724-205	
13	04-10332	4			Standard Corner Block	DWG 2724-204	
14	04-10413	2			2724A Main Board Support Bar	DWG 2724-209	
15	04-10848		1		2724 Bottom Plate (vinyl clad aluminum)	DWG 2724-218	
16	05-10280	6			Spacer, snap-in, 3/8 lg	Smith 4095	
17	05-10253	4			Spacer, 1/4 dia, 1 lg, #6	Smith 2104	
18	92-06004		6		6-32 x 1/4" Phil Truss Head S.S.		
22	05-10288	4			Spacer, 1/4 dia, 1/2 lg, #6, aluminum	Smith 8503	
23	05-10282	6			Spacer, 1/4 dia, 1/4 lg, #6, fibre	Smith 2130	
28	05-10808		2		Dual Tilting Feet (Plastic,Gray)	Elma Electronics 63-018S	
29	90-08008	4			#8-32 x 1/2" Phil Pan S.S.		
30	90-06009	6			#6-32 x 9/16" Phil Pan S.S.		
31	91-06006	14			#6-32 x 3/8" Phil Flat 82 Deg. S.S.		
32	91-06009	8			#6-32 x 9/16" Phil Flat 82 Deg. S.S.		
33	90-06012	2			#6-32 x 3/4" Phil Pan S.S.		
35	90-04008	2			#4-40 x 1/2" Phil Pan S.S.		
36	90-06020	8			#6-32 x 1-1/4" Phil Pan S.S.		
38	05-10086	1			Solder lug, #6, internal star	Smith 1412-6	
39	98-08002	4			#8 Internal Star Washer		
40	98-06001	19			#6 Split Lock Washer,STD,S.S.		
41	98-04001	2			#4 Split Lock Washer S.S.		
42	98-08000	4			#8 Flat Washer		
43	97-08001	4			#8-32 Radio Hex Nut		
45	97-06000	4			#6-32 Standard Hex Nut, S.S.		
46	97-04001	2			#4-40 Radio Hex Nut S.S.		
64	05-10015	2			Foot, rubber, white	Acc. Rubber 2089W-017	
68	05-10019	13			Cable tie, 4"x 1/8"	Panduit WRN-4	
69	05-10261	2			Tie-wrap block, large	Panduit ABM2S-A	
74	80-02020	32			20awg Wire, Black TFE	M16878/4-BGE-0	
75	80-02120	41			20awg Wire, Brown TFE	M16878/4-BGE-1	
76	80-02920	54			20awg Wire, White TFE	M16878/4-BGE-9	
77	80-02520	77			20awg Wire, Green TFE	M16878/4-BGE-5	
78	80-02226	36			26awg Wire, Red TFE	M16878/4-BDE-2	
79	80-02026	36			26awg Wire, Black TFE	M16878/4-BDE-0	
80	80-02320	23			20awg Wire, Orange TFE	M16878/4-BGE-3	
81	80-02420	23			20awg Wire, Yellow TFE	M16878/4-BGE-4	
82	80-02620	23			20awg Wire, Blue TFE	M16878/4-BGE-6	
83	80-02022	24			22AWG Wire, Black TFE	M16878/4-BFE-0	
A1	2724-600	1			2724A Main Board Assembly	Assembly 2724-600	
A2	2724-601	1			2724A Display Board Assembly	Assembly 2724-601	
A4	2724-603	1			2724A Keyboard Assembly	Assembly 2724-603	
F1	05-04020	1			750mA 250V Slo Blo Fuse	Littlefuse 3SB750	
J1	05-10531	1			Binding post, very low thermal, red	Pomona 3770-2	
J2	05-10531	1			Binding post, very low thermal, red	Pomona 3770-2	
J3	05-10532	1			Binding post, very low thermal, black	Pomona 3770-0	
J4	05-10532	1			Binding post, very low thermal, black	Pomona 3770-0	

REF.DES.	STOCK #	QUANTITY A T N	DESCRIPTION	MANUFACTURING/PURCHASING DATA	ALTERNATE
J5	05-10531	1	Binding post, very low thermal, red	Pomona 3770-2	
J6	05-10531	1	Binding post, very low thermal, red	Pomona 3770-2	
J7	05-10532	1	Binding post, very low thermal, black	Pomona 3770-0	
J8	05-10532	1	Binding post, very low thermal, black	Pomona 3770-0	
J9	05-10166	1	Receptical, AC, filter	Corcom 6EF1	
S101	05-03017	1	Slide Switch,115/230V,2Pole	Switchcraft,4625LFR	
S102	05-03062	1	Keyswitch,2Pole,w/2 Keys	C&K,Y201-13-0-A1-01-Q4	
S103	05-03061	1	Switch, 2PDT, Black w/yellow eye	Schadow ZFWE152UEE11010106B	
T1	04-20035	1	2724A Transformer	DWG 2724-010	
XF1	05-10018	1	Fuseholder, panel mount	Littlefuse 345061	

REF.DES.	STOCK #	QUANTITY A	T	N	DESCRIPTION	MANUFACTURING/PURCHASING DATA
13	05-10487	5			Spacer, 1/4 dia, 1/4 lg, swage, #6, aluminum	Useco A1570-B-1/4-16
14	04-30083	1			2724A IEEE Board	DWG 2724-702
18	05-10244	1			IEEE connector hardware kit	AMP 552633-3
20	98-08001	2			#8 Split Lock Washer STD S.S.	
21	97-04001	2			#4-40 Radio Hex Nut S.S.	
22	98-04000	2			#4 Flat Washer S.S.	
C801	02-10006	1			0.01u 50V Ceramic disc	Illinois 103GR050-Z
D801	03-20028	1			Diode, signal, schottky	1N5711
D802	03-20028	1			Diode, signal, schottky	1N5711
D803	03-20028	1			Diode, signal, schottky	1N5711
D804	03-20028	1			Diode, signal, schottky	1N5711
IC801	03-30162	1			Octal Bus Transceiver	
IC802	03-30158	1			GPIB to MPU Interface	
IC803	03-30157	1			Octal GPIB Transceiver (Thin Package)	
IC804	03-30157	1			Octal GPIB Transceiver (Thin Package)	
PL801	05-10271	1			Cable 20pin Dil to 20pin Dil, 6.00 inches	DWG 2724-050
RN801	01-40003	1			15 x 10K Network	A-B 316A-103
SK801	05-10268	1			Connector, female, 24 way, pcb	Amphenol 57-20240-14

REF.DES.	STOCK #	QUANTITY A	QUANTITY T	QUANTITY N	DESCRIPTION	MANUFACTURING/PURCHASING DATA
3	04-10128	1			2009 Chassis	PAKTEK CM6-225 ETC.
6	04-10435	1			2724 Maintenance Kit Front Panel (unscreened)	DWG 2724-211
7	04-10436	1			2724 Maintenance Kit Back Plate	DWG 2724-212
8	04-10434	1			2724 Maintenance Cover	DWG 2724-210
10	05-03078	1			Switch,Rotary,4 Pole 2-6 Position	Centralab,PSA-211
11	05-10190	6			Binding post, med.-thermal, black, 8-32	Pomona 3750-0
12	05-10191	6			Binding post, med.-thermal, red, 8-32	Pomona 3750-2
13	05-10202	1			Knob, collet, black, silver cap	Alco AS1-352-W3-302
14	05-10203	1			Skirt, black, pointer	Alco AW5-382
15	96-00006	2			3/8-32 Panel Nut	
16	80-02020	48			20awg Wire, Black TFE	M16878/4-BGE-0
17	80-02220	48			20awg Wire, Red TFE	M16878/4-BGE-2
21	05-10019	2			Cable tie, 4"x 1/8"	Panduit WRN-4
22	05-10261	2			Tie-wrap block, large	Panduit ABM2S-A
23	05-10400	6			Cable, low thermal, 4 ft (SL48)	Pomona 1756-48

SECTION XIII DRAWINGS AND SCHEMATICS

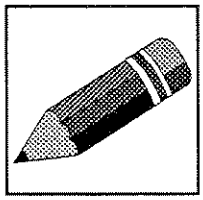

The following schematic diagrams have been included in this manual:

2724-600	1 page	2724A Main PCB Assembly
2724-070	7 pages	2724A Main Board Schematic
2724-601	1 page	2724A Display PCB Assembly
2724-603	1 page	2724A Keyboard Assembly
2724-071	1 page	2724A Display Board Schematic
2724-400	2 pages	2724A Chassis Assembly
2724-602	1 page	2724A Option TL-1 IEEE Board Assembly
2724-072	1 page	2724A Option TL-1 IEEE Board Schematic

REVISIONS				
ZONE	LTR	DESCRIPTION	DATE	APPROVED

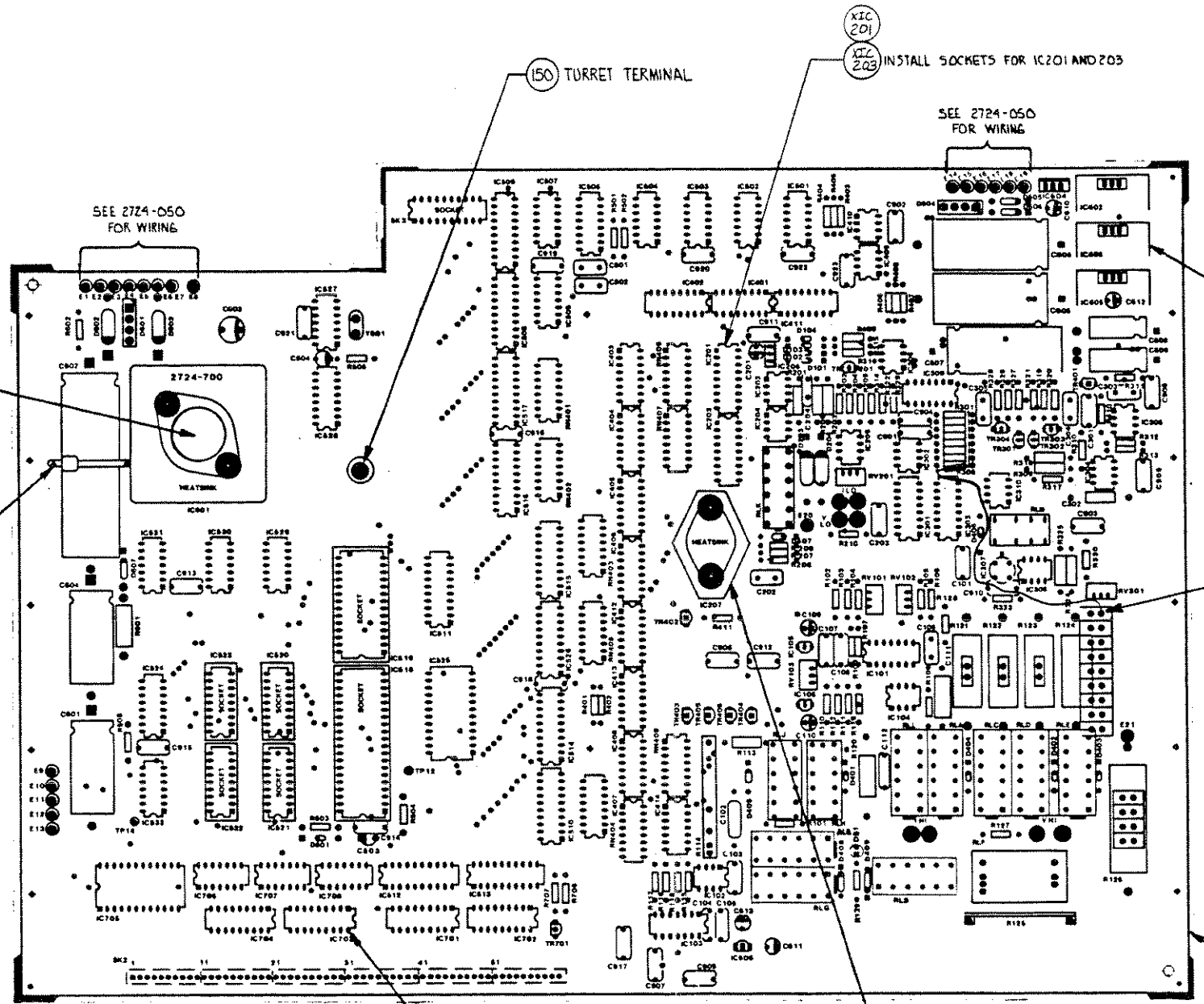

MATERIAL ~		Valhalla Scientific Inc. SAN DIEGO, CALIFORNIA
FINISH ~		2724A MAIN BOARD ASSY.
SCALE 1/1	CODE IDENT NO. 53504	SIZE D	DRAWING NO. 2724-600	REV. W
SHEET 1 OF 1		

8 7 6 5 4 3 2 1

NOTES: (UNLESS OTHERWISE SPECIFIED)

1. FOR ASSY OF P.C.B. SEE 2724-700.

REVISIONS				
ECO	LTR	DESCRIPTION	DATE	APPROVED
0103	C	R101 WAS 1K IS 10K R106 WAS 20KΩ IS 4.7KΩ ADDED R128 DELETED D105 & D106 ADDED C112 C111 WAS .05μF C102 WAS 0.1μF IS 0.5μF	8-11-83	PdW
381	D	CHANGED R317 FROM 250K TO 249K Ω	3-19-84	

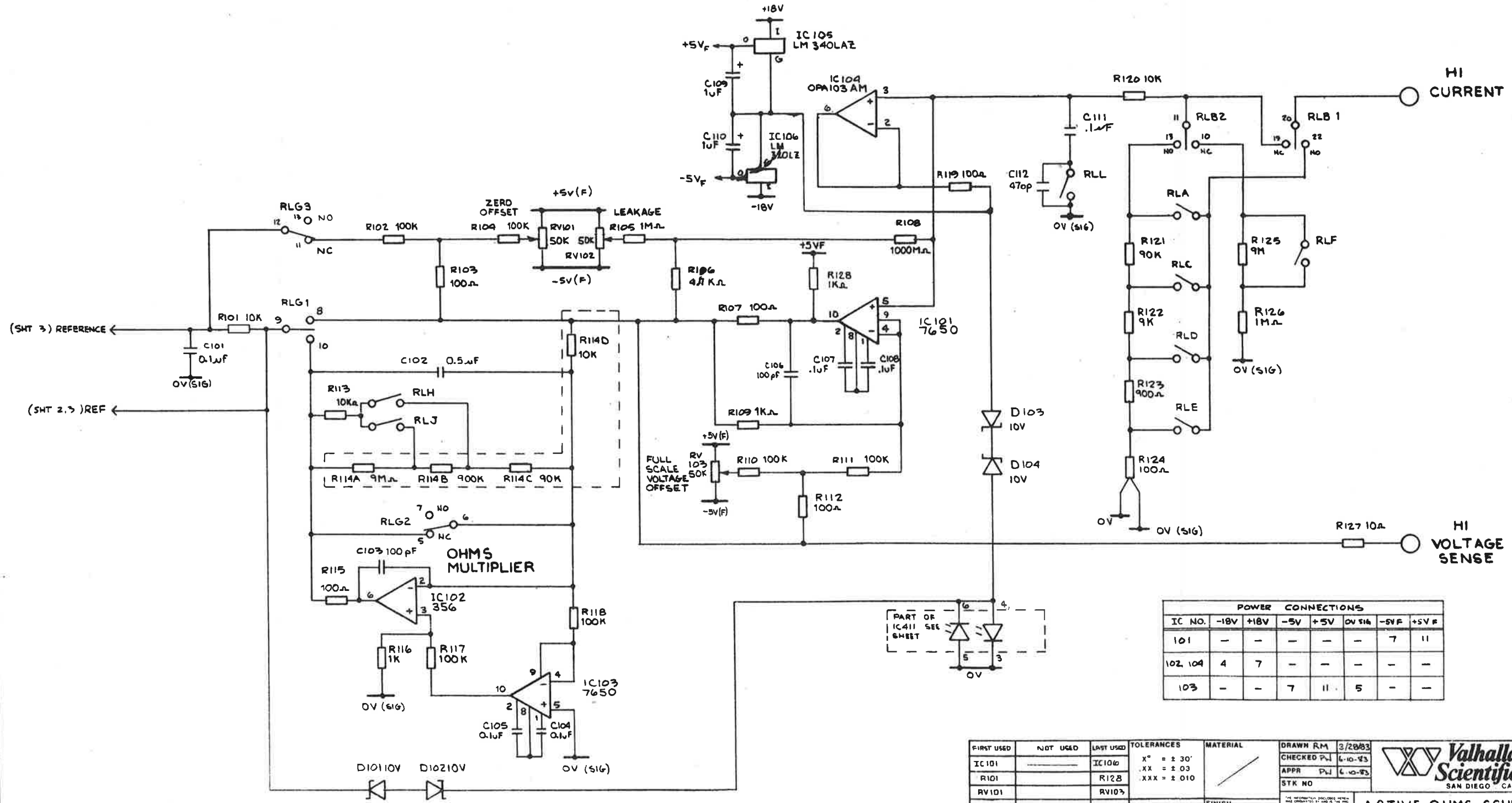

POWER CONNECTIONS							
IC NO.	-18V	+18V	-5V	+5V	0V SIG	-5V F	+5V F
101	—	—	—	—	—	7	11
102, 104	4	7	—	—	—	—	—
103	—	—	7	11	5	—	—

FIRST USED	NOT USED	LAST USED
IC101	———	IC106
R101		R128
RV101		RV103
C101		C112
D101		D106
RLA	RLK	RLL

TOLERANCES: X° = ± 30' .XX = ± 03 .XXX = ± 010

BREAK ALL SHARP CORNERS AND EDGES. MACH SURFACES 64

MATERIAL

FINISH

DRAWN RM	3/28/83	
CHECKED PW	4-10-83	
APPR PW	4-10-83	
STK NO		

Valhalla Scientific Inc. SAN DIEGO CA

THE INFORMATION DISCLOSED HEREIN WAS ORIGINATED BY AND IS THE PROPERTY OF VALHALLA SCIENTIFIC INC. IT IS DISCLOSED IN CONFIDENCE AND MAY NOT BE REPRODUCED OR USED IN WHOLE OR IN PART AS THE BASIS FOR MANUFACTURE OR SALE OF ITEMS WITHOUT THE WRITTEN PERMISSION OF VALHALLA SCIENTIFIC INC.

ACTIVE OHMS SCHEMATIC

2724A

SCALE	CODE IDENT	SIZE	DRAWING NO	REV
—	53504	D	2724-070	D

SHEET 1 OF 7

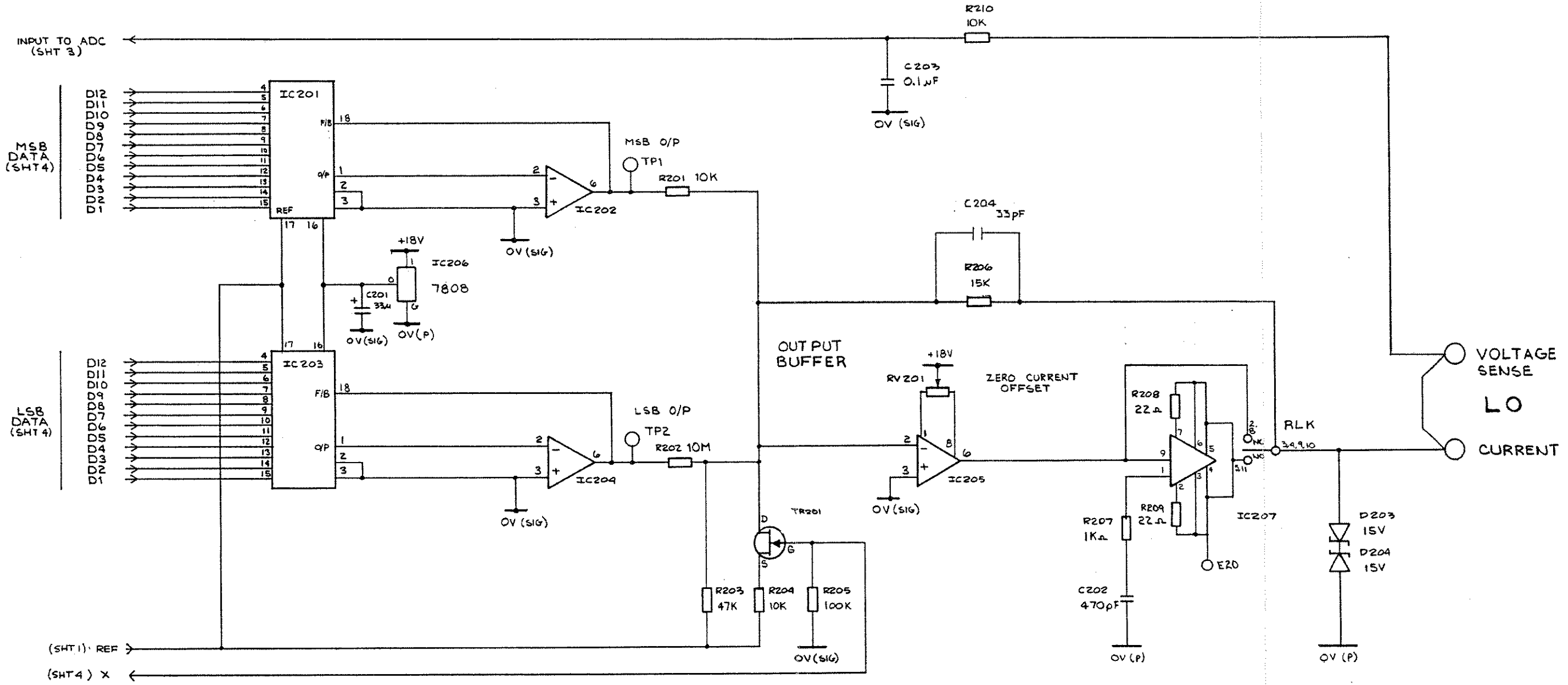

POWER CONNETIONS			
IC#	+18V	-18V	
201, 203	/	/	/
202, 204, 205	7	4	
207	8	CASE	/

FIRST USED	NOT USED	LAST USED
IC201	———	IC207
R201	———	R210
RV201	———	RV201
D201	D201, D202	D204
C201	———	C204
TR201	———	TR201
RLK	———	RLK

TOLERANCES
X = ± .30
.XX = ± .03
.XXX = ± .010

BREAK ALL SHARP CORNERS AND EDGES, MACH SURFACES 64 ✓

MATERIAL /

FINISH /

Valhalla Scientific Inc.
SAN DIEGO, CA

MULTIPLYING D TO A CONVERTER - SCHEMATIC
2724A

SCALE —
SHEET 2 OF 7

CODE IDENT	SIZE	DRAWING NO	REV
53504	D	2724-070	H

NOTES: (UNLESS OTHERWISE SPECIFIED)

REVISIONS				
ECO	LTR	DESCRIPTION	DATE	APPROVED

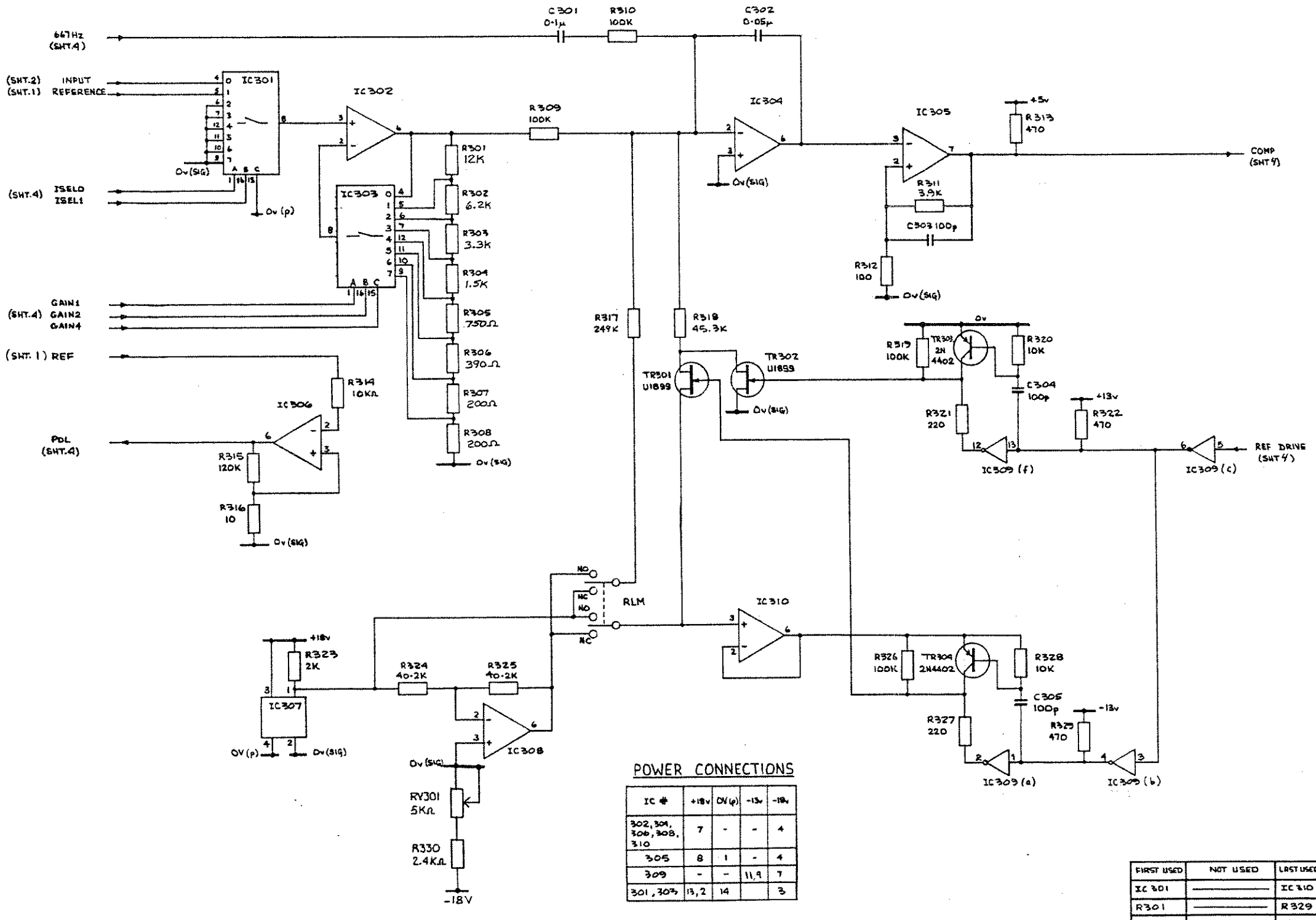

POWER CONNECTIONS

IC #	+18v	0V(p)	-13v	-18v
302, 304, 306, 308, 310	7	-	-	4
305	8	1	-	4
309	-	-	11,9	7
301, 303	13,2	14		3

FIRST USED	NOT USED	LAST USED
IC 301		IC 310
R301		R329
C301		C305
TR301		TR304
RLM		RLM

TOLERANCES
X° = ± 30'
.XX = ± .03
.XXX = ± .010

BREAK ALL SHARP CORNERS AND EDGES, MACH SURFACES 64

MATERIAL

FINISH

Valhalla Scientific Inc.
SAN DIEGO, CA

A-TO-D CONVERTOR
2724 A

SCALE —
SHEET 3 OF 7
CODE IDENT 53504
SIZE D
DRAWING NO 2724-070
REV H

NOTES: (UNLESS OTHERWISE SPECIFIED)

REVISIONS				
ECO	LTR	DESCRIPTION	DATE	APPROVED

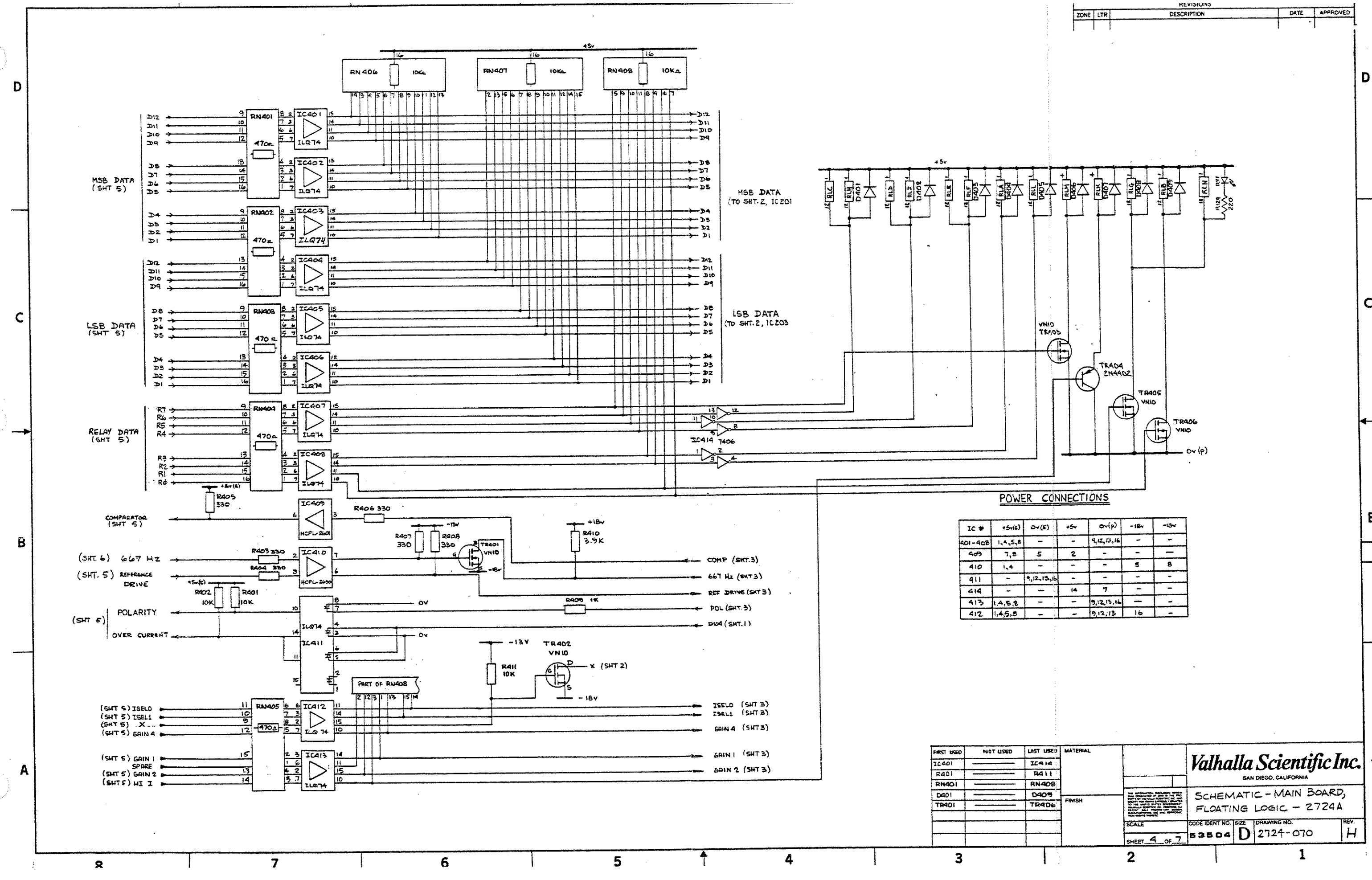

IC #	+5v(E)	0v(E)	+5v	0v(p)	-18v	-13v
401-408	1,4,5,8	-	-	9,12,13,16	-	-
409	7,8	5	2	-	-	—
410	1,4	-	-	-	5	8
411	-	9,12,13,16	-	-	-	-
414	-	—	14	7	-	-
413	1,4,5,8	-	-	9,12,13,16	—	-
412	1,4,5,8	-	-	9,12,13	16	-

FIRST USED	NOT USED	LAST USED
IC401	———	IC414
R401	———	R411
RN401	———	RN408
D401	———	D409
TR401	———	TR406

MATERIAL

FINISH

Valhalla Scientific Inc.
SAN DIEGO, CALIFORNIA

SCHEMATIC - MAIN BOARD, FLOATING LOGIC - 2724A

SCALE

SHEET 4 OF 7

CODE IDENT NO. 53504 | SIZE D | DRAWING NO. 2724-070 | REV. H

POWER CONNECTIONS

IC #	+5V(E)	0V(E)
501	14,18,13,14	7
502	14,18,13,14	7,11,12
506, 507	14	7
505	3,11,16	8
508,509, 510, 511	20	10
512, 513, 515,516, 514,517,526	20	1,10

IC #	+5V(E)	0V(E)
518	7,33,36,48	1,39
519	1,28,26,27	14
520,521	18	9
522,523	18	8
525	24	12
524	16	4,5,8
503	14	7,4,5,9,10,
504	14	7,1,2, 12,13

ZONE	LTR	REVISIONS DESCRIPTION	DATE	APPROVED

FIRST USED	NOT USED	LAST USED
IC501		IC526
R501		R505
C501		C503
D501		D501
SW1		SW1
IC708		IC708
R706		R707
TR701		TR701

MATERIAL		Valhalla Scientific Inc. SAN DIEGO, CALIFORNIA
FINISH		SCHEMATIC - MAIN BOARD, MICROPROCESSOR 2724 A
SCALE NONE	CODE IDENT NO. 53504	SIZE D DRAWING NO. 2724-070 REV. H
SHEET 5 OF 7		

5 OF 7

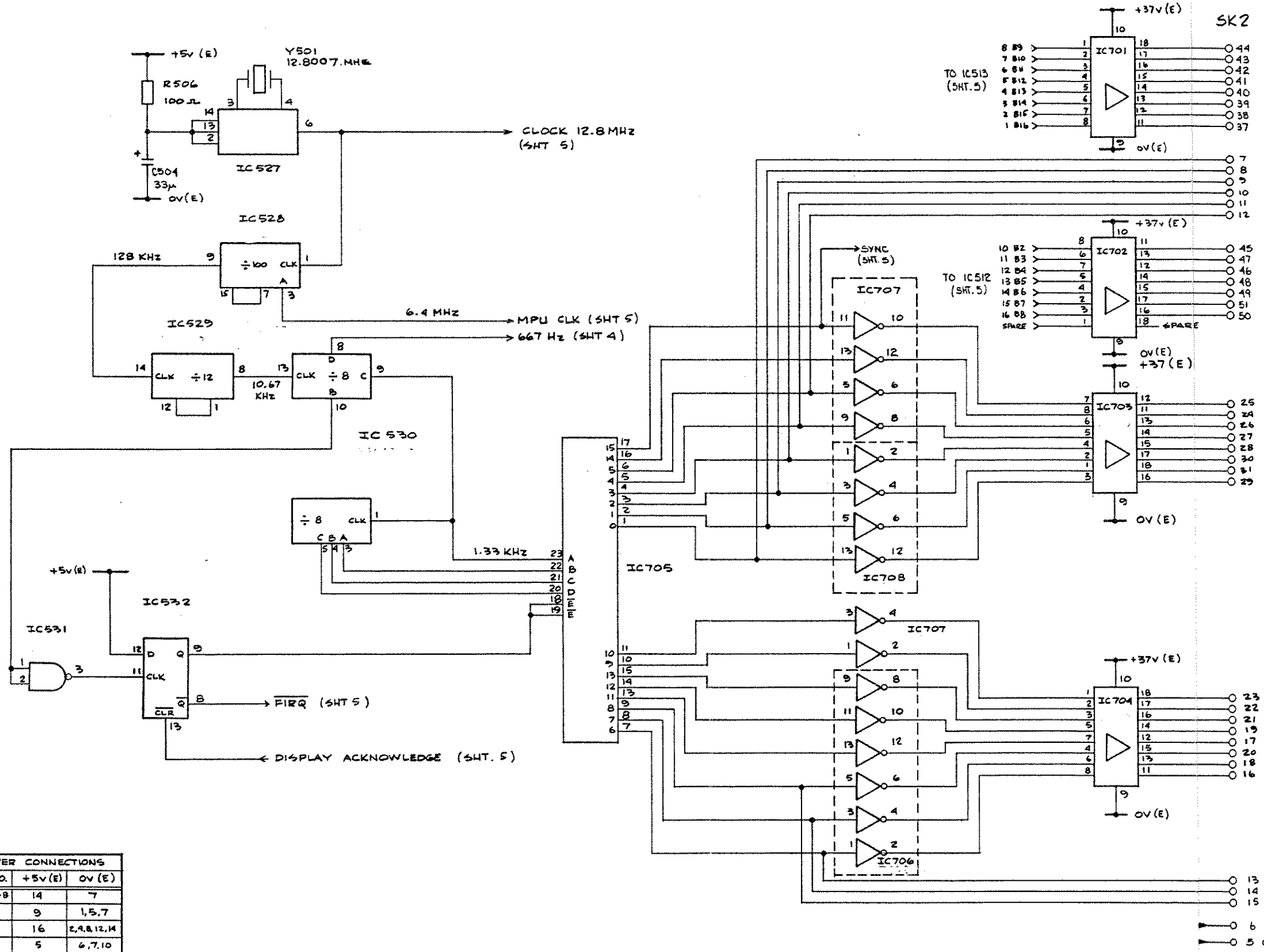

POWER CONNECTIONS		
IC NO.	+5v(E)	0v (E)
531, 706-8	14	7
527	9	1,5,7
528	16	2,4,8,12,14
529	5	6,7,10
530	14	2,7,12
532	2,10,4,14	7
705	24	12

FIRST USED	NOT USED	LAST USED
IC701		IC708
IC527		IC532
R506		R506
C504		C504
Y501		Y501

TOLERANCES: X = ± 30' .XX = ± .03 .XXX = ± .010

BREAK ALL SHARP CORNERS AND EDGES, MACH SURFACES 84

MATERIAL

FINISH

Valhalla Scientific Inc. SAN DIEGO, CA

SCHEMATIC, MAIN BOARD CLOCK

SCALE	CODE IDENT	SIZE	DRAWING NO	REV
—	53504	D	2724-070	H

SHEET 6 OF 7

NOTES: (UNLESS OTHERWISE SPECIFIED)

REVISIONS				
ECO	LTR	DESCRIPTION	DATE	APPROVED

NOTES: (UNLESS OTHERWISE SPECIFIED)

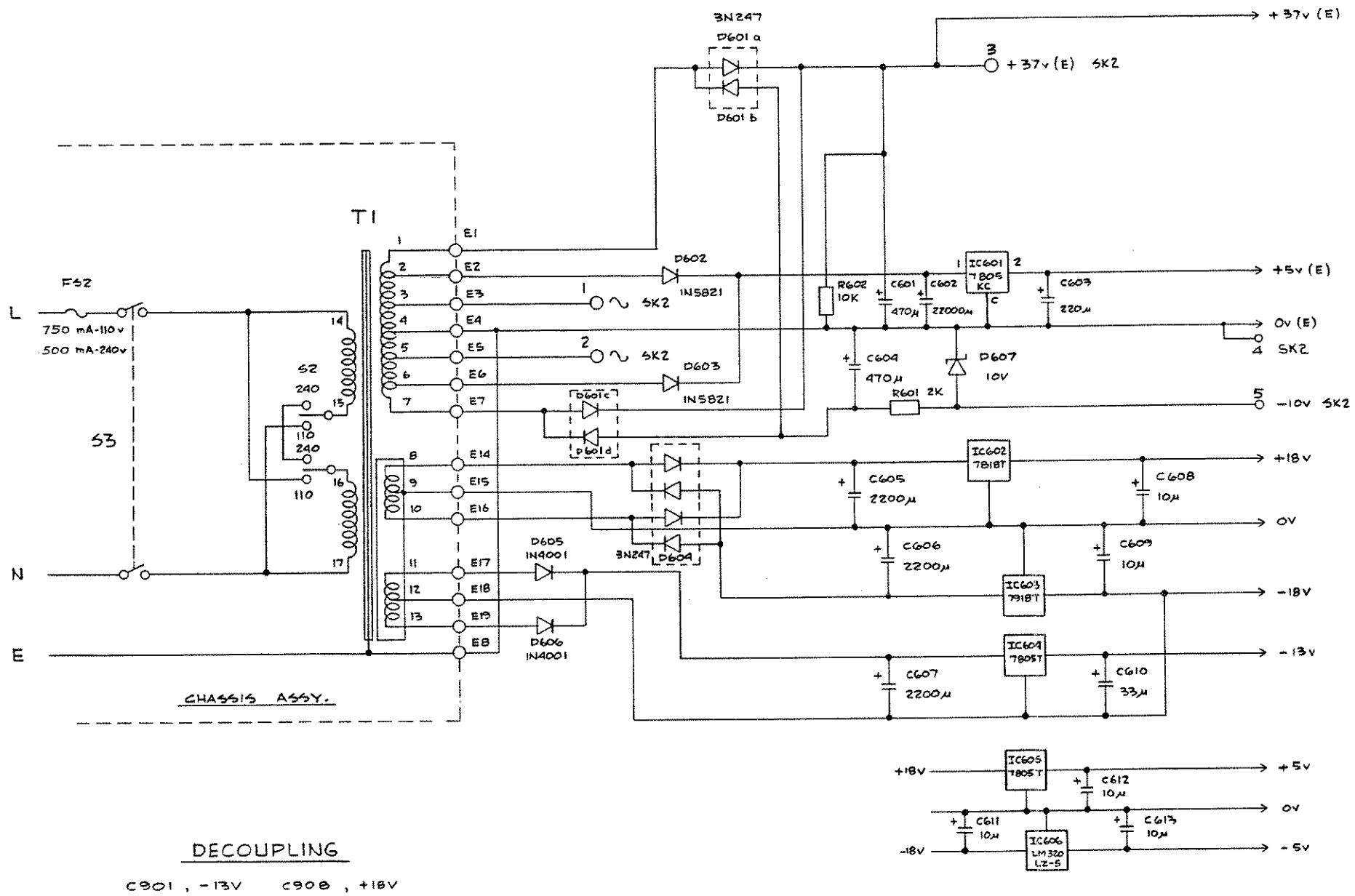

DECOUPLING

C901 , -13V	C908 , +18V
C902 , -13V	C909 , +18V
C903 , -18V	C910 , +18V
C904 , -18V	C911 , +18V
C905 , -18V	C912 , +18V
C906 , +5V	C913 - 923, + 5V (E)
C907 , +5V	

COMPONENT REFERENCE DATA

IC601 — BOTTOM VIEW

1. INPUT
2. OUTPUT
3. GROUND

IC606 — BOTTOM VIEW

1. GROUND
2. INPUT
3. OUTPUT

IC603

1. GROUND
2. INPUT
3. OUTPUT

IC602, 604, 605

1. INPUT
2. GROUND
3. OUTPUT

FIRST USED	NOT USED	LAST USED
IC601		IC606
R601		R602
D601		D607
C601		C613
E1	E9 - E13	E19
FS2		FS2
T1		T1

TOLERANCES: X = ± .30', .XX = ± .03, .XXX = ± .010

BREAK ALL SHARP CORNERS AND EDGES, MACH SURFACES 64

MATERIAL

FINISH

STK NO

Valhalla Scientific Inc. SAN DIEGO, CA

SCHEMATIC MAIN BD. 2724A

SCALE	CODE IDENT	SIZE	DRAWING NO	REV
SHEET 7 OF 7	53504	D	2724 - 070	H

REVISIONS			
ECO	DESCRIPTION	DATE	APPROVED

2. FOR SCHEMATIC SEE DRAWING 2724-071.

SHOWN IS COMP. SIDE

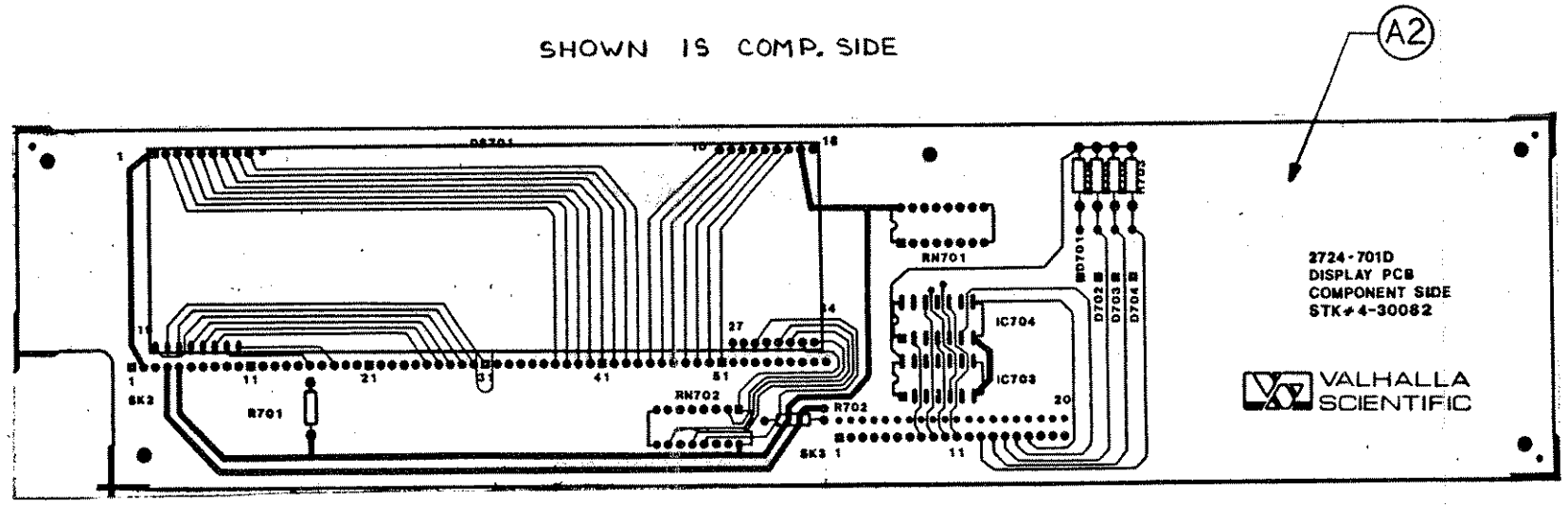

SK2 AND 3
ARE MOUNTED FARSIDE

MATERIAL ~		Valhalla Scientific Inc. SAN DIEGO, CALIFORNIA			
FINISH ~	THE INFORMATION DISCLOSED HEREIN WAS ORIGINATED BY AND IS THE PROPERTY OF VALHALLA SCIENTIFIC INC. AND EXCEPT FOR RIGHTS EXPRESSLY GRANTED TO THE UNITED STATES GOVERNMENT, VALHALLA SCIENTIFIC INC. RESERVES ALL PATENT, SALE, PROPRIETARY, DESIGN, MANUFACTURING, USE AND REPRODUCTION RIGHTS THERETO	DISPLAY PCB ASSY 2724A			
	SCALE 1/1 SHEET 1 OF 1	CODE IDENT NO. 53504	SIZE C	DRAWING NO. 2724-601	REV. C

Optico 279-0151

1. FOR PARTS LIST SEE 2724-601.
2. FOR SCHEMATIC SEE DRAWING 2724-071.

NOTES: (UNLESS OTHERWISE SPECIFIED)

1. FOR PARTS LIST SEE 2724-603.
2. FOR SCHEMATIC SEE 2724-071.

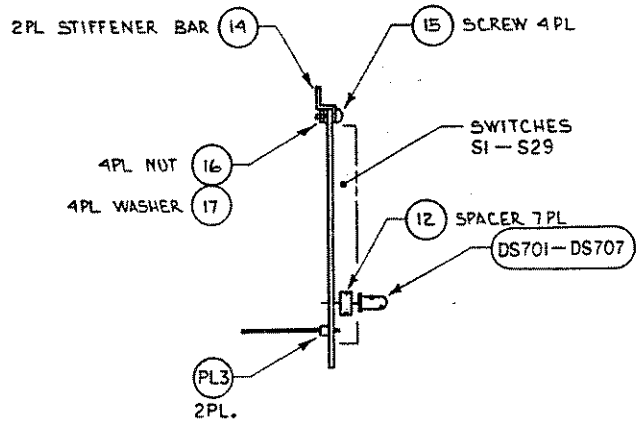

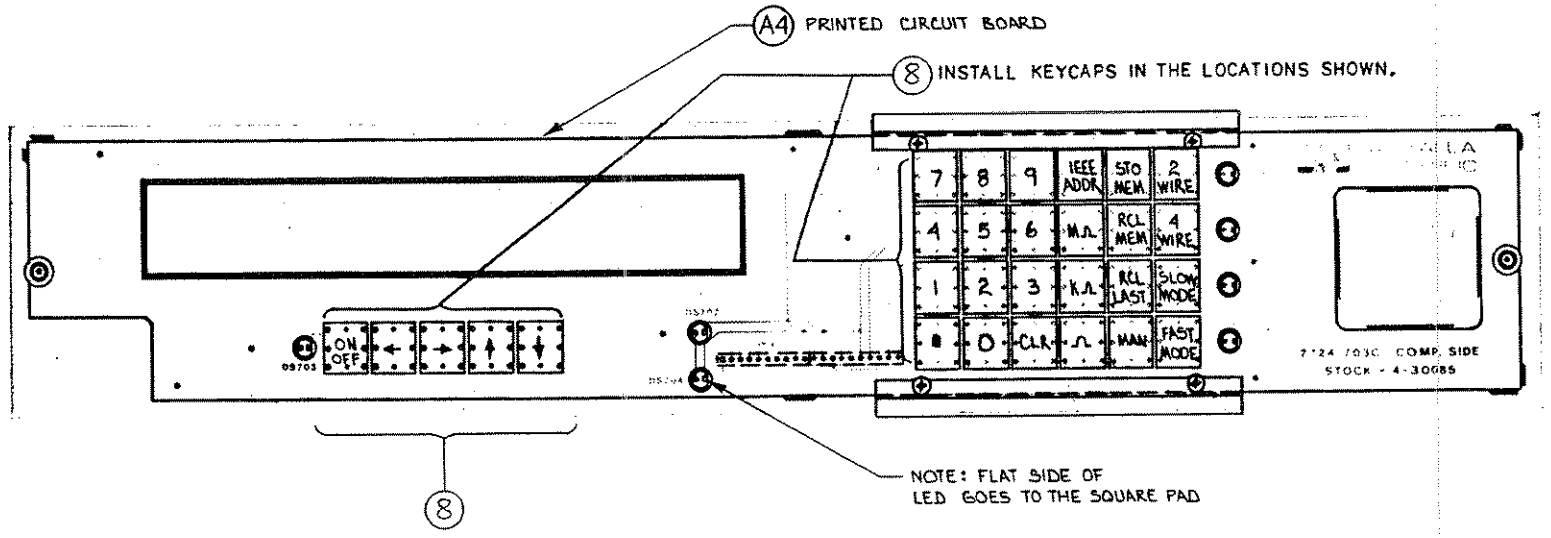

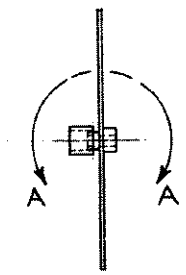

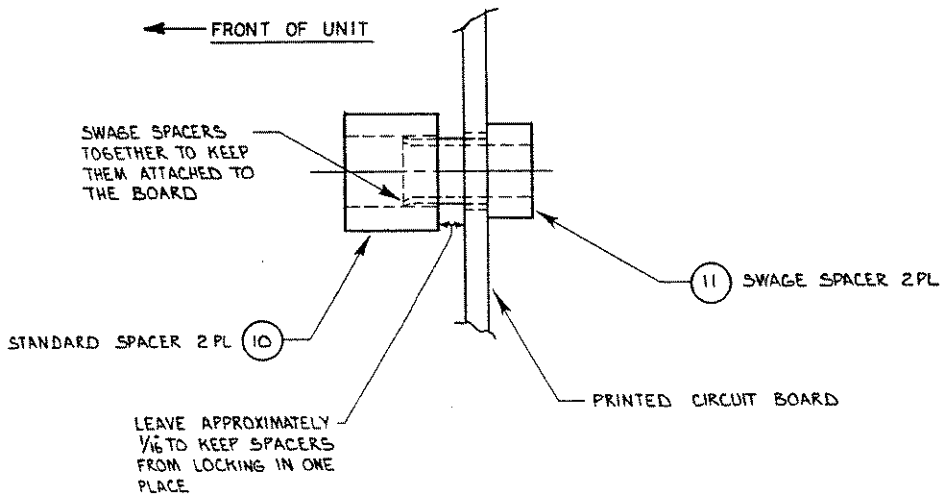

VIEW A-A SCALE 4:1

DASH NO	QTY REQD	NEXT ASSEMBLY	USED ON
	1	2724-900	2724

TOLERANCES
X = ±.30'
.XX = ±.03
.XXX = ±.010

BREAK ALL SHARP CORNERS AND EDGES. MACH SURFACES 63

MATERIAL

FINISH

STK NO

Valhalla Scientific Inc.
SAN DIEGO, CA

2724 KEYBOARD ASSY.

SCALE 1:1 | SHEET 1 OF 1 | CODE IDENT 53504 | SIZE D | DRAWING NO 2724-603 | REV F

REVISIONS			
ECO	LTR	DESCRIPTION	DATE	APPROVED

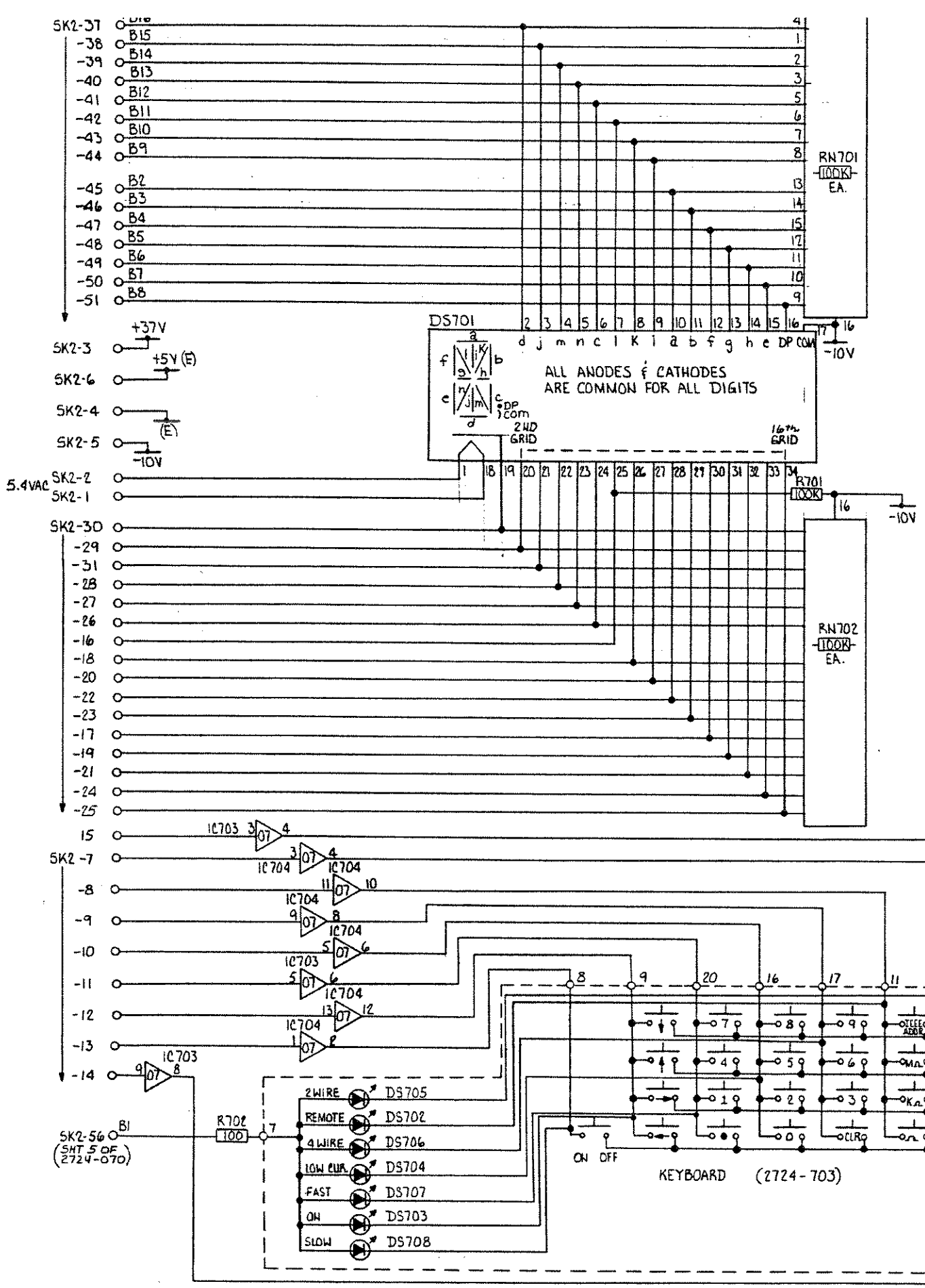

POWER CONNECTIONS

IC NO.	+5V (E)	GND (E)
703,704	14	7

REF. DES.

NOT USED	LAST USED
	IC 704 DS 704 D 704 R 706 RN 702

NOTES:

1. UNLESS OTHERWISE NOTED:
   A. ALL RESISTORS ARE 1/4 W, 5%
2. FOR ASSY. OF DISPLAY P.C.B. SEE 2724-601.
3. FOR ASSY. OF KEYBOARD SEE 2724-603

⚠4 GREETING SELECTION
NONE = " HI-THERE "
ALL = " BON JOUR "
D701 = " HELLO "
D702 = " GUTEN TAG "

DASH NO	QTY REQD	NEXT ASSEMBLY	USED ON

TOLERANCES
X = ± 30'
.XX = ± .03
.XXX = ± .010

MATERIAL ~

BREAK ALL SHARP CORNERS AND EDGES. MACH SURFACES 64

FINISH ~

Valhalla Scientific Inc.
SAN DIEGO, CA

SCHEMATIC-DISPLAY

SCALE	CODE IDENT	SIZE	DRAWING NO	REV
~	53504	D	2724-071	A

SHEET 1 OF 1

NOTES: (UNLESS OTHERWISE SPECIFIED)

NOTES:

1. FOR REV E BOARDS AND EARLIER ONLY!

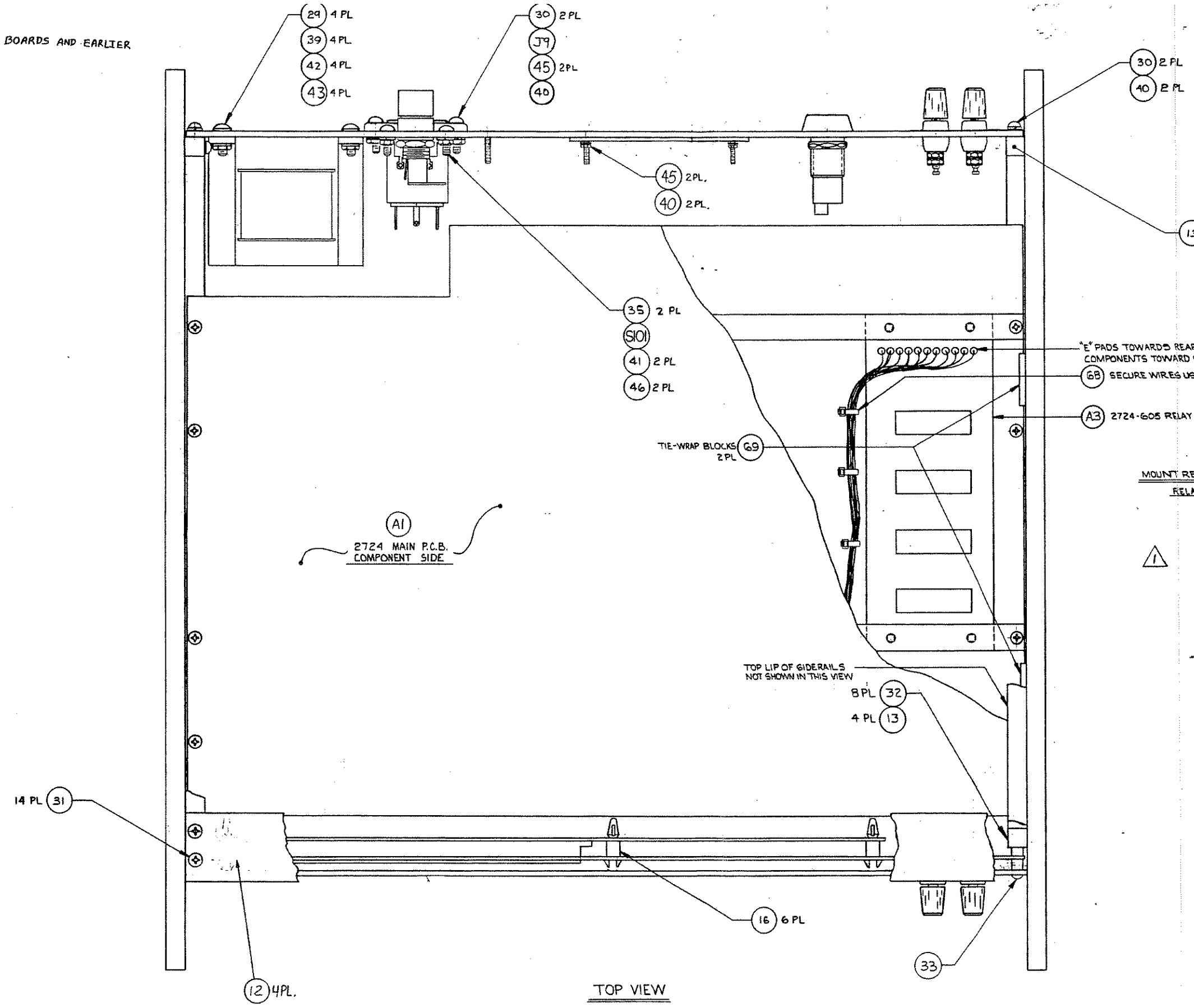

TOP VIEW

MOUNT RELAY BD AS SHOWN IN FIGURE – WIRE RELAY BD TO MAIN PCB AS SHOWN

RELAY BOARD	WIRE COLOR	MAIN BOARD
E1	BLACK	RLA PIN 6
E2	BROWN	RLC PIN 6
E3	RED	RLD PIN 6
E4	ORANGE	RLE PIN 6
E5	YELLOW	RLE PIN 1
E6	GREEN	RLD PIN 1
E7	BLUE	RLC PIN 1
E8	VIOLET	RLA PIN 1
E9	GREY	RLA PIN 7
E10	WHITE	RLA PIN 2
E11	BLACK	TR403-SOURCE

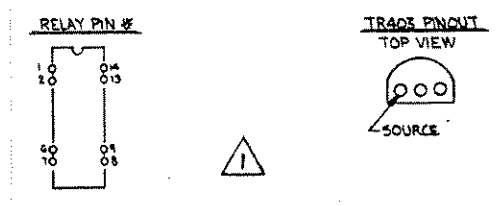

NOTES:

1. FOR PARTS LIST SEE 2724-400.
2. FOR SCHEMATICS SEE:
   2724-070, MAIN BOARD
   2724-071, DISPAY BOARD
   2724-072, IEEE BOARD
   2724-075, RELAY BOARD

ECO	LTR	DESCRIPTION	DATE	APPROVED

MATERIAL

FINISH

Valhalla Scientific Inc.
SAN DIEGO, CALIFORNIA

2724 ASSEMBLY

SCALE	CODE IDENT NO.	SIZE	DRAWING NO.	REV.
1:1	53504	D	2724-400	V

SHEET 1 OF 2

REVISIONS

NOTES:

⚠1 INSTALL AT TEST INTO BOTTOM COVER USING MFR PROVIDED HARDWARE.

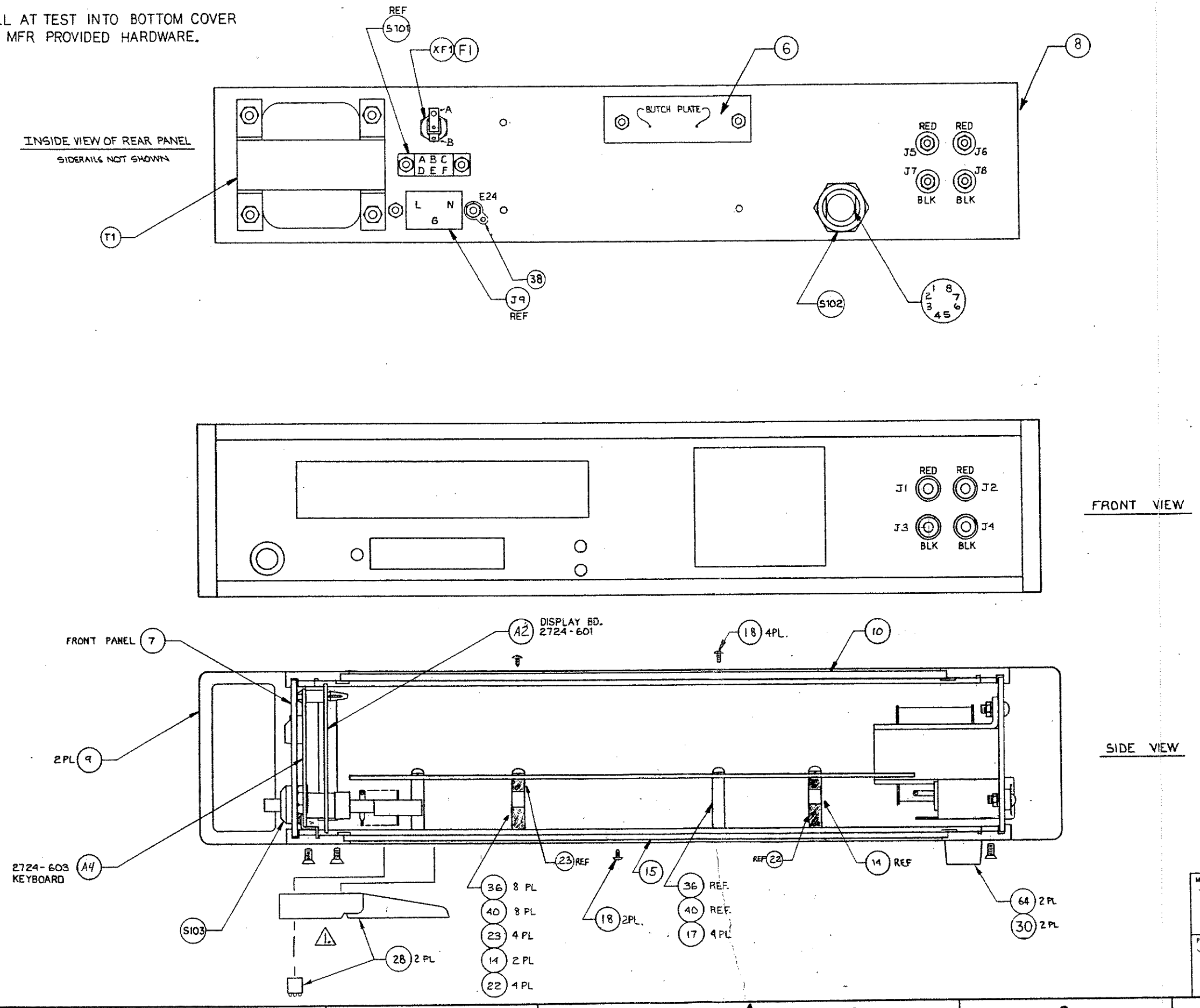

MATERIAL		Valhalla Scientific Inc. SAN DIEGO, CALIFORNIA			
FINISH		2724 ASSEMBLY			
	SCALE 1:1 SHEET 2 OF 2	CODE IDENT NO. 53504	SIZE D	DRAWING NO. 2724-400	REV. V

REVISIONS

ECO	LTR	DESCRIPTION	DATE	APPROVED

	LTR	DESCRIPTION	DATE	APPROVED

ASSEMBLY PROCEDURE

ASSEMBLE ITEMS 18,16,20 + 21 TIGHTEN HEX NUTS. THEN ASSEMBLE ITEM 22,14 AND THE REMAINDER OF 18. TIGHTEN ALL HEX NUTS AND SOLDER PINS OF ITEM 16 TO P.C.B.

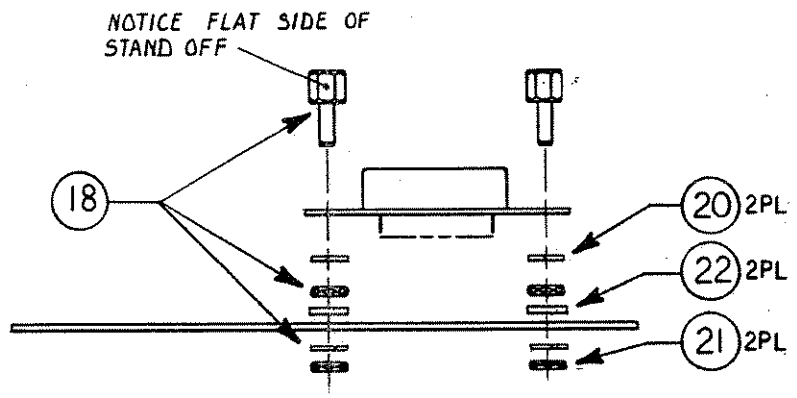

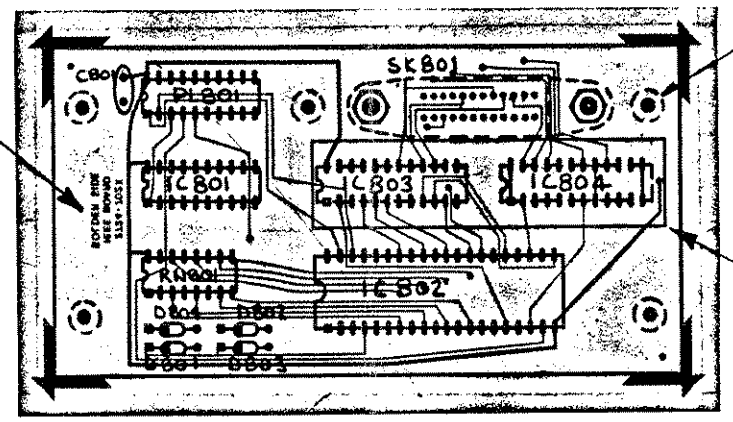

SHOWN IS ASSY 2724-602
CLAD SHOWN IS FAR SIDE.

13 5 PL. MOUNT ON FAR SIDE OF BOARD.

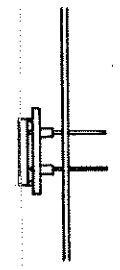

INSTALL EXPANSION BD. ASSY (2724-604) IN PLACE OF IC 803 & 804. MAKE SURE PIN 1'S ON IEEE BD. AND PIN 1'S ON EXPANSION BD. LINE UP (ONLY IF IC803 & IC804 ARE NOT MOUNTED ON IEEE BOARD.)

2. FOR PARTS LIST SEE 2724-602.
1. FOR SCHEMATIC SEE 2724-072.

NOTES:

MATERIAL		Valhalla Scientific Inc. SAN DIEGO, CALIFORNIA		
FINISH	THE INFORMATION DISCLOSED HEREIN WAS ORIGINATED BY AND IS THE PROPERTY OF VALHALLA SCIENTIFIC INC. AND EXCEPT FOR RIGHTS EXPRESSLY GRANTED TO THE UNITED STATES GOVERNMENT, VALHALLA SCIENTIFIC INC. RESERVES ALL PATENT, SALE, PROPRIETARY, DESIGN, MANUFACTURING USE AND REPRODUCTION RIGHTS THERETO.	ASSEMBLY - IEEE BD. (OPTION TL-1)		
	SCALE 1/1	CODE IDENT NO. 53504	SIZE C	DRAWING NO. 2724-602 REV. H
	SHEET 1 OF 1			

Optico 279-0151

REVISIONS

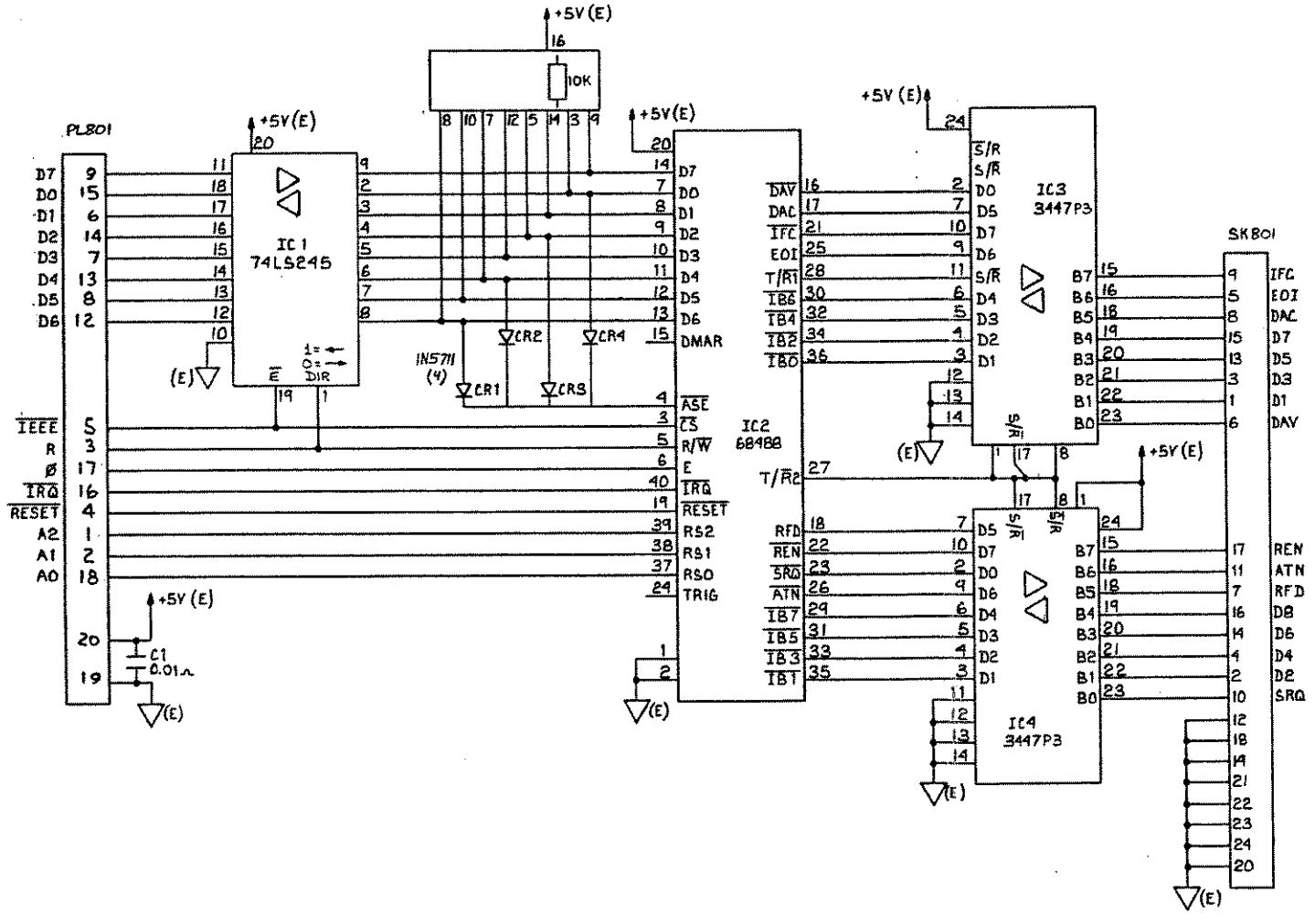

MATERIAL		Valhalla Scientific Inc. SAN DIEGO, CALIFORNIA
FINISH		2724A OPTION TL-1 IEEE-488 INTERFACE BOARD
SCALE NONE	SHEET 1 OF 1	CODE IDENT NO 53504 · SIZE D · DRAWING NO. 2724-072 · REV. H

REVISIONS			
ZONE	LTR	DESCRIPTION	DATE / APPROVED